PRC 3-HEAD-FS6-1 - Contact carrier

1070198

https://www.phoenixcontact.com/us/products/1070198

Please be informed that the data shown in this PDF document is generated from our online catalog. Please find the complete data in the user documentation. Our general terms of use for downloads are valid.



Contact carrier, Range of articles: PRC 35, design: Release with tool or by hand (see accessories), housing material: PPE, color: black, number of positions: 3, min. conductor cross-section: 1.5 mm^2, max. conductor cross-section: 6 mm^2, rated voltage: 690 V AC, rated current: 35 A, Connection method: Screw connection, Contact insert without connector housing. Please order the appropriate connector housings according to the accessories list.

Your advantages

- Versatile interfaces with straight and angled connector housings
- Universal accommodation of existing connector heads with screw connection technology
- Modular system for optimized storage
- Locking mechanism can be unlocked manually or using a tool
- Ideal for indoor and outdoor use due to weatherproof materials

Commercial data

Item number	1070198
Packing unit	1 pc
Minimum order quantity	1 pc
Sales key	AB03
Product key	ABLCBA
GTIN	4055626749112
Weight per piece (including packing)	43.3 g
Weight per piece (excluding packing)	28.925 g
Customs tariff number	85366990
Country of origin	PL

Technical data

Notes

Order information:	Contact insert without connector housing. Please order the appropriate connector housings according to the accessories list.
Note on application	For assembly notes, please refer to the packing slip

Product properties

Product type	Contact insert
Product family	PRC 35
Type	Release with tool or by hand (see accessories)
Number of positions	3
Connection profile	2+PE
Coding	AD

Insulation characteristics

Protection class	II
Degree of pollution	2

Electrical properties

Rated voltage (III/2)	690 V
Rated voltage	690 V AC (III/2) in accordance with IEC 61984
	600 V AC (III/2) in accordance with UL 2238/UL 2237, when mounted
	500 V DC (III/2) in accordance with IEC 61535, when mounted
Rated surge voltage (III/2)	8 kV
Rated current	35 A (With 6 mm² conductor cross-section in accordance with IEC 61984)
	35 A (with AWG 10, in accordance with UL 2237)
	32 A (With 6 mm² conductor cross-section in accordance with IEC 61535)

Connection data

Tightening torque	... 1 Nm
Conductor cross-section flexible	4 mm² ... 6 mm²
Conductor cross-section rigid	1.5 mm² ... 6 mm²

Dimensions

Width	35.9 mm
Height	34.5 mm
Length	51.2 mm

Material specifications

Color (Housing)	black (RAL 9005)
Color of the housing part	black

Material Seal	EPDM (Housing seal)
Material Contact carrier	PPE
Material Contact	CuZn (Contact material, Pb < 0.1)
Flammability rating according to UL 94	V0
Housing material	PPE
Contact material	Cu alloy
Contact surface material	silver-plated
O-ring material	EPDM

Cable/line

Single wire, cross section	1.5 mm² 6 mm²
Halogen-free	yes

Mechanical properties

Mechanical data

Insertion/withdrawal cycles	2000 (Test specification: IEC 60512-13-2)

Environmental and real-life conditions

Ambient conditions

Degree of protection	IP66/IP68 (2 m / 24 h) IP69K (when mounted)
	IP66/IP68 (2 m / 24 h) IP69K
Category of shock impact	IK08 (-25°C)
Ambient temperature (operation)	-40 °C ... 105 °C (dependent on the derating curve)
Ambient temperature (storage/transport)	-40 °C ... 70 °C
Ambient temperature (assembly)	-5 °C ... 85 °C

Drawings

Schematic diagram

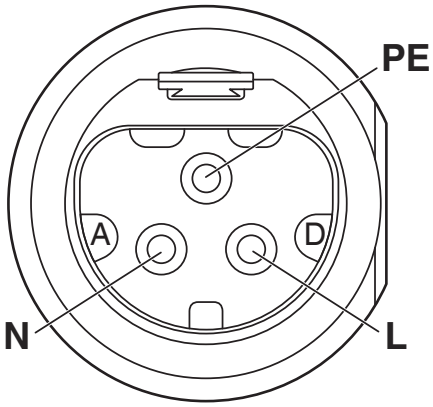

Connector pin assignment

Approvals

To download certificates, visit the product detail page: https://www.phoenixcontact.com/us/products/1070198

cUL Recognized
Approval ID: E468743-20200116

UL Recognized
Approval ID: E468743-20200116

VDE Zeichengenehmigung
Approval ID: 40054228

	Nominal voltage U_N	Nominal current I_N	Cross section AWG	Cross section mm^2
keine				
	320 V	32 A	-	-

VDE Zeichengenehmigung
Approval ID: 40054231

	Nominal voltage U_N	Nominal current I_N	Cross section AWG	Cross section mm^2
keine				
	690 V	35 A	-	-

Classifications

ECLASS

ECLASS-13.0	27440605
ECLASS-15.0	27440605

ETIM

ETIM 10.0	EC002560

UNSPSC

UNSPSC 21.0	39121400

Environmental product compliance

EU RoHS

Fulfills EU RoHS substance requirements	Yes, No exemptions

China RoHS

Environment friendly use period (EFUP)	EFUP-E
	No hazardous substances above the limits

EU REACH SVHC

REACH candidate substance (CAS No.)	Triphenyl phosphate(CAS: 115-86-6)
SCIP	1f654d32-803c-44e4-98b8-9b72ba263bbf

EF3.1 Climate Change

CO2e kg	0.433 kg CO2e

Phoenix Contact 2026 © - all rights reserved
https://www.phoenixcontact.com

Phoenix Contact USA
586 Fulling Mill Road
Middletown, PA 17057, United States
(+717) 944-1300
info@phoenixcon.com