M23-12P2N8AA600S - Device connector front mounting

1069330

https://www.phoenixcontact.com/us/products/1069330

Please be informed that the data shown in this PDF document is generated from our online catalog. Please find the complete data in the user documentation. Our general terms of use for downloads are valid.



The figure shows the product with assembled crimp contacts. Please order crimp contacts separately.

M23, Device connector front mounting, application: Signal, series: M23 PRO, angled rotatable, shielded: yes, for standard and ONECLICK fast locking system, No. of pos.: 12, Direction of rotation: Counter direction, contact connection type: Pin, Crimp connection, flange dimensions: 28 mm x 28 mm, coding: N, Item is lead-free in accordance with RoHS II without Exemption 6c (Pb < 0.1 %)

Your advantages

- Solutions with cross-manufacturer compatibility for standard and fast locking systems
- Modern, consistent design for highly convenient operation
- Crimping connection: vibration- and temperature-resistant assembly
- All housing can be fitted with pin or socket contacts
- Safe use in the field, thanks to high degree of protection

Commercial data

Item number	1069330
Packing unit	1 pc
Minimum order quantity	1 pc
Sales key	AB30
Product key	ABRABM
GTIN	4055626762098
Weight per piece (including packing)	126.85 g
Weight per piece (excluding packing)	110.752 g
Customs tariff number	85366990
Country of origin	DE

Technical data

Notes

Order information:	Order 12 x 1 mm crimp contacts separately
Notes on operation	Please observe the derating curve.

Product properties

Product type	Circular connectors (device side)
Product family	M23 PRO

Material specifications

Flammability rating according to UL 94	V0

Connector

Insulating body

Note	Order information: Order crimp contacts Ø 1 mm separately
Coding	N
Material (Insulating body)	PA 6.6
Insertion/withdrawal cycles	100
Connection method	Crimp connection
Contact switching type	Pin
Application	Signal
Number of positions	12
Direction of rotation	Counter direction
Connection profile	12
Installation height	2000 m
Number (Signal contacts)	12
Contact diameter (Signal contacts)	1 mm
Litz wires Min. cross section (Signal contacts)	0.08 mm²
Litz wires Max. cross section (Signal contacts)	1 mm²
Rated current Contact (Signal contacts)	8 A (for max. connection cross section)
Rated voltage Contact (Signal contacts)	150 V
Rated surge voltage	2.5 kV
Overvoltage category	III
Degree of pollution	3

Housing

Type	Flange housing
Thread type	M23
Design	angled rotatable
Type of locking	for standard and ONECLICK fast locking system
Mounting type	Front mounting/square flange (4x Ø 3.1 mm)
Flange dimensions	28 mm x 28 mm

Housing material	GD-Zn
Seal material	FKM
Degree of protection (plugged in)	IP66/IP68 (2 m / 24 h)

Environmental and real-life conditions

Ambient conditions

Degree of protection	IP68
Ambient temperature (operation)	-40 °C ... 105 °C (see to derating)
Permanent temperature	125 °C (DIN EN 60512-9-2 / 1000 h)

Drawings

Dimensional drawing

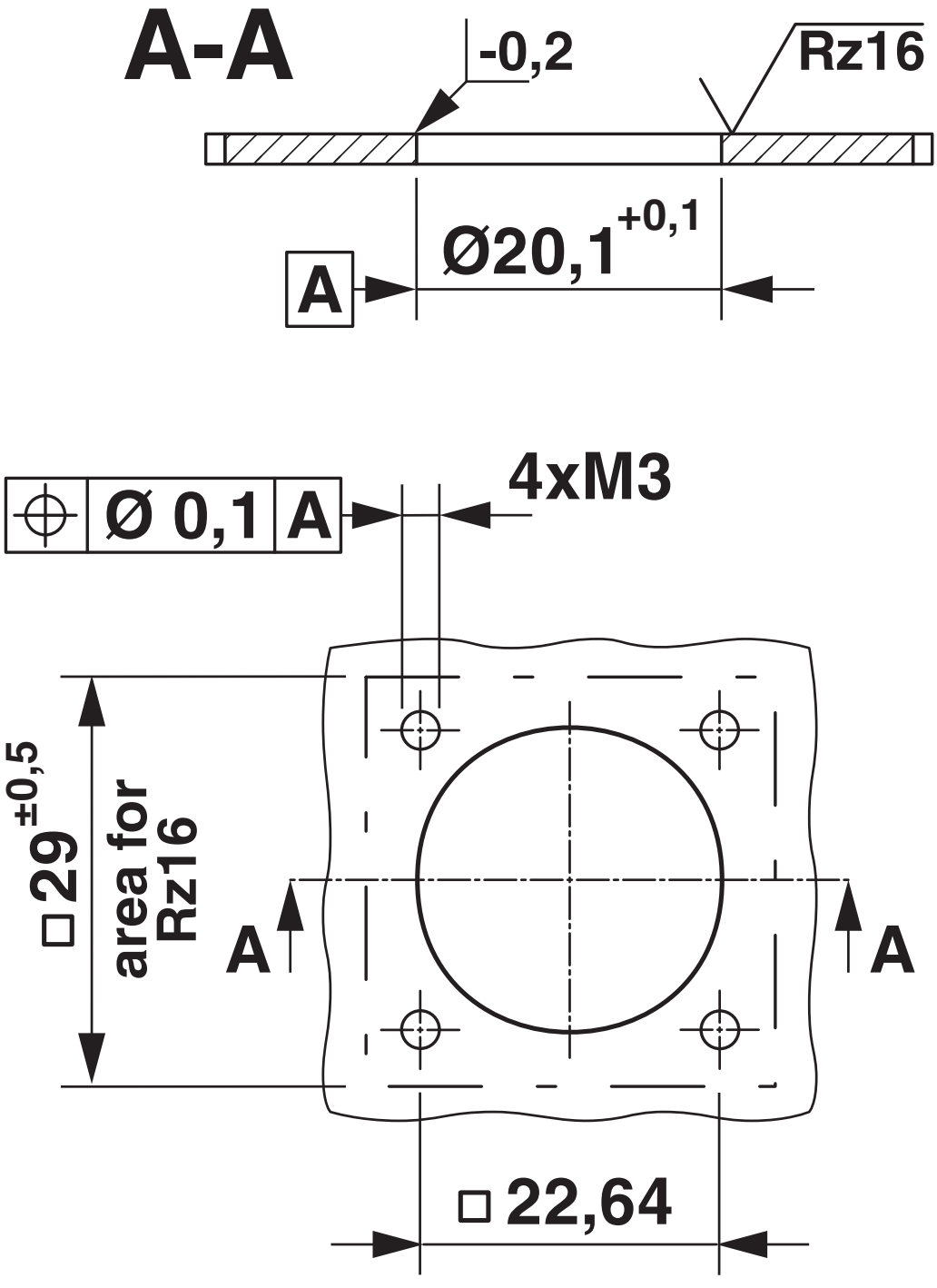

Installation dimensions

Schematic diagram

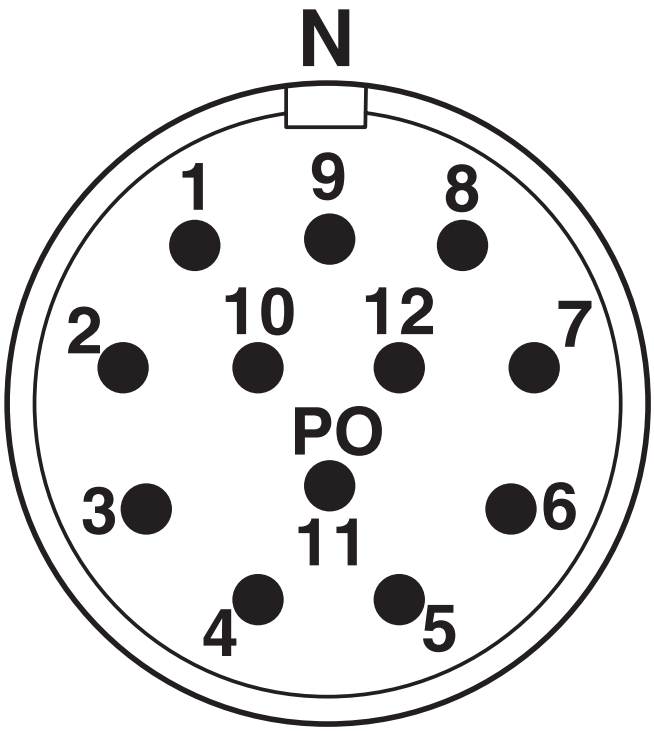

Connector pin assignment

Diagram

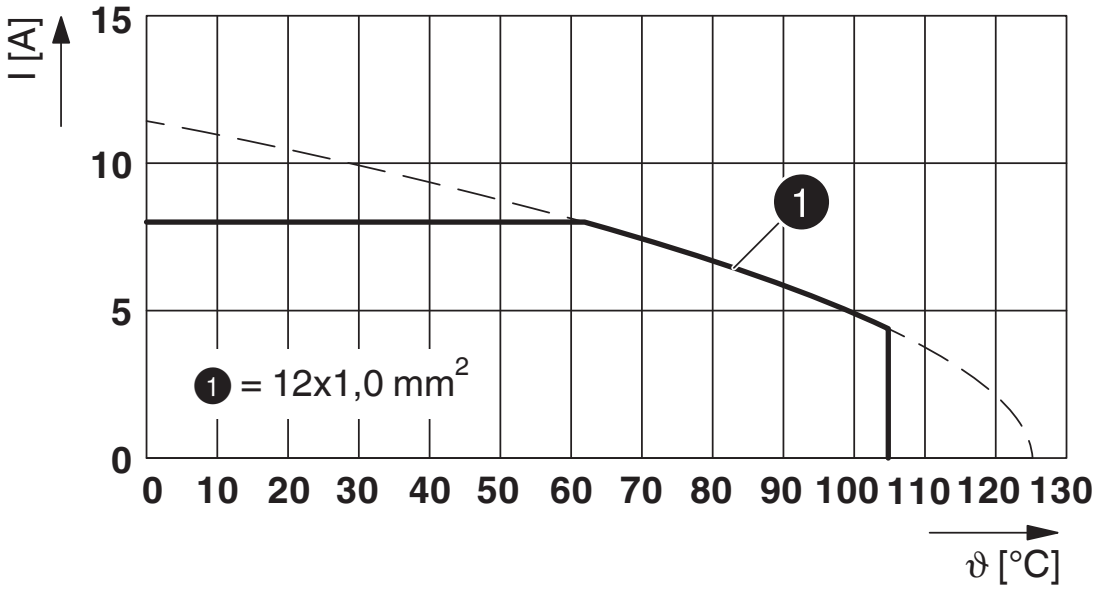

I = current strength, ϑ = ambient temperature, 12x 8 A

Approvals

To download certificates, visit the product detail page: https://www.phoenixcontact.com/us/products/1069330

cUL Recognized
Approval ID: E335019-20141210

UL Recognized
Approval ID: E335019-20141210

Classifications

ECLASS

ECLASS-13.0	27440109
ECLASS-15.0	27440109

ETIM

ETIM 10.0	EC003569

UNSPSC

UNSPSC 21.0	39121400

Environmental product compliance

EU RoHS

Fulfills EU RoHS substance requirements	Yes, No exemptions

China RoHS

Environment friendly use period (EFUP)	EFUP-E
	No hazardous substances above the limits

EU REACH SVHC

REACH candidate substance (CAS No.)	No substance above 0.1 wt%

Phoenix Contact 2026 © - all rights reserved
https://www.phoenixcontact.com

Phoenix Contact USA
586 Fulling Mill Road
Middletown, PA 17057, United States
(+717) 944-1300
info@phoenixcon.com