QPD STAK 3PE1,5 BK - Connector

1065121

https://www.phoenixcontact.com/us/products/1065121

Please be informed that the data shown in this PDF document is generated from our online catalog. Please find the complete data in the user documentation. Our general terms of use for downloads are valid.



Connector, connection method: IDC connection, number of positions: 3+PE, 0.5 mm^2 ... 1.5 mm^2, 400 V, 16 A AC/DC, black, with one QUICKON nut, external cable diameter: 7 mm ... 13 mm, Connectors for the motor connection of Venetian blinds, blinds, roller shutters, and awnings

Your advantages

- Compatible with all classic motor connections for Venetian blinds, blinds, roller shutters, and awnings
- Convenient: quick and easy assembly without special tools
- Innovative and time saving - QUICKON fast connection for time saving of up to 80 % for on-site connection
- QPD STAK/STAS can be used for electrical devices for household use in accordance with IEC 60335
- Safer connection with mechanical coding to protect against mismatching, and touch-proof protection in accordance with DIN EN 0105

Commercial data

Item number	1065121
Packing unit	1 pc
Minimum order quantity	1 pc
Sales key	BF50
Product key	AF6FAA
GTIN	4055626725048
Weight per piece (including packing)	37 g
Weight per piece (excluding packing)	36.6 g
Customs tariff number	85366990
Country of origin	DE

Technical data

Notes

Assembly note	NOTE: Tighten the QUICKON nut all the way to the stop or to the specified torque.
Notes on connection	You will find notes on assembly in our assembly video.

Product properties

Product type	Installation connector
Product family	QPD
Number of positions	4
Connection profile	3+PE
Position marking	1, 2, 3, PE
Number of connections per position	1

Insulation characteristics

Overvoltage category	III
Degree of pollution	3

Electrical properties

Rated surge voltage (III/3)	4 kV
Rated voltage (III/3)	400 V
Nominal voltage U_N	400 V AC/DC
Nominal current I_N	16 A AC/DC

Connection data

Connection technology

Connection method On the device side	IDC connection
Frequency of connections between conductors of the same cross section	max. 10

Conductor connection

Conductor cross-section flexibel	0.5 mm² ... 1.5 mm²
Conductor cross-section solid	0.5 mm² ... 1.5 mm²
Connection cross section AWG	20 ... 16
Tightening torque Union nut	8 Nm

Dimensions

Dimensional drawing	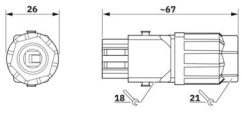
Width	27.4 mm
Height	26 mm

Length	67 mm

Material specifications

Color	black (RAL 9005)
Material Contact surface	Silver (power contacts)
	Tin (PE contact)
Flammability rating according to UL 94	V0
Material wire insulation	PVC/PE/TPE/rubber
Contact material	CuZn
Contact carrier material	PA

Cable/line

Structure of individual litz in acc. with VDE 0295 / smallest wire diameter	VDE 0295 class 1 to 6/min. 0.15 mm
External cable diameter	7 mm ... 13 mm
Wire diameter including insulation	1.6 mm ... 3 mm
Position marking	1, 2, 3, PE
Single wire, color	Blue 1, black 2, brown 3, green-yellow PE

Mechanical properties

Mechanical data

Insertion/withdrawal cycles	50

Environmental and real-life conditions

Ambient conditions

Degree of protection	IP54
	IP66/IP67 (When combined with Phoenix Contact mating connector)
Ambient temperature (operation)	-40 °C ... 100 °C
Temperature when conductor connected	-5 °C ... 50 °C
Ambient temperature (storage/transport)	-40 °C ... 100 °C

Drawings

Dimensional drawing

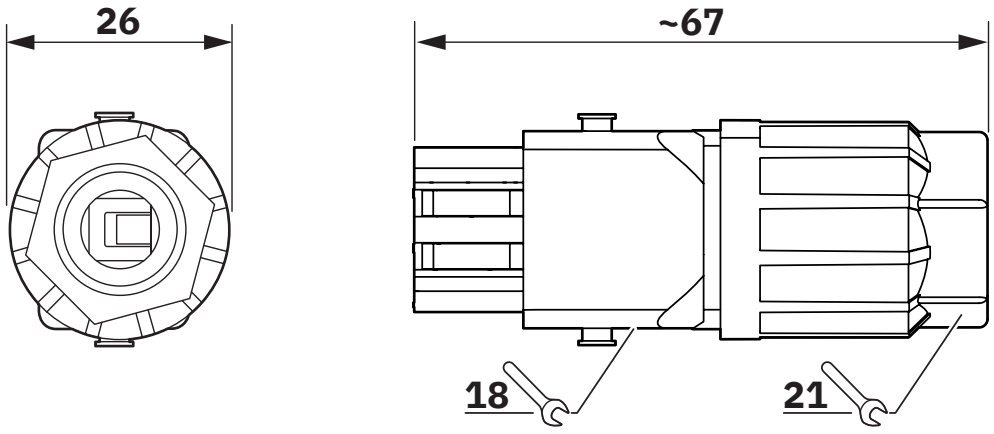

Length = 67 mm, with QUICKON nut screwed to the stop

Diagram

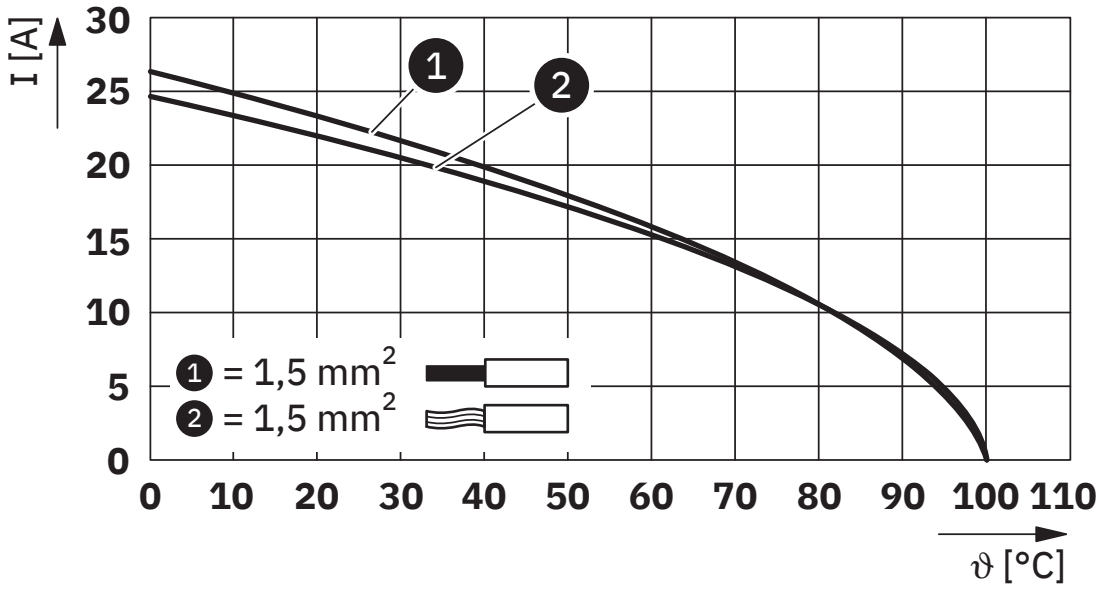

Derating diagram for 1.5 mm²

Diagram

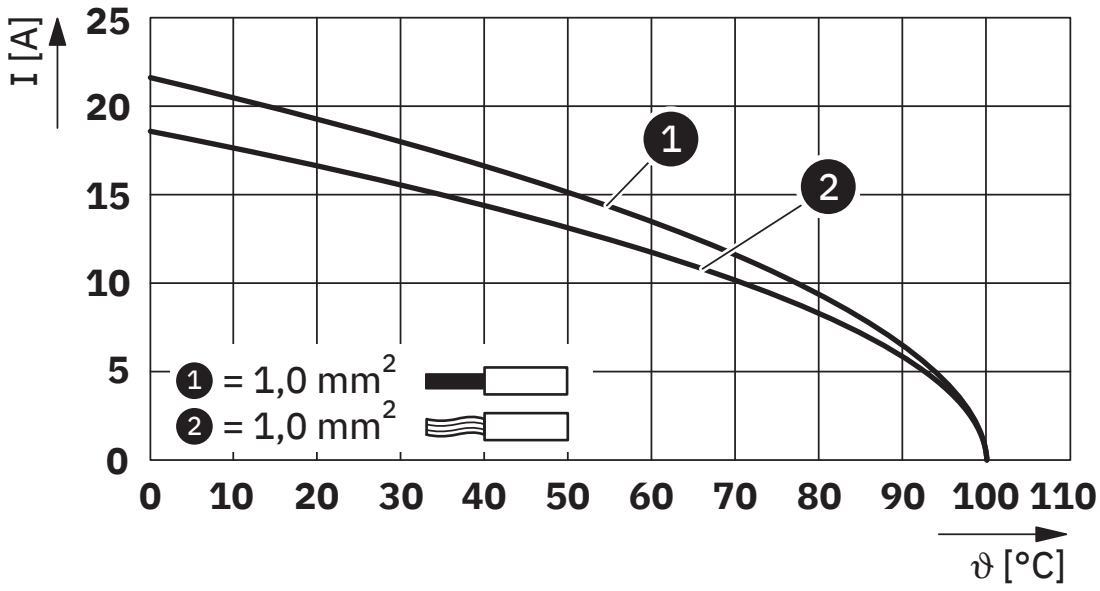

Derating diagram for 1.0 mm²

Diagram

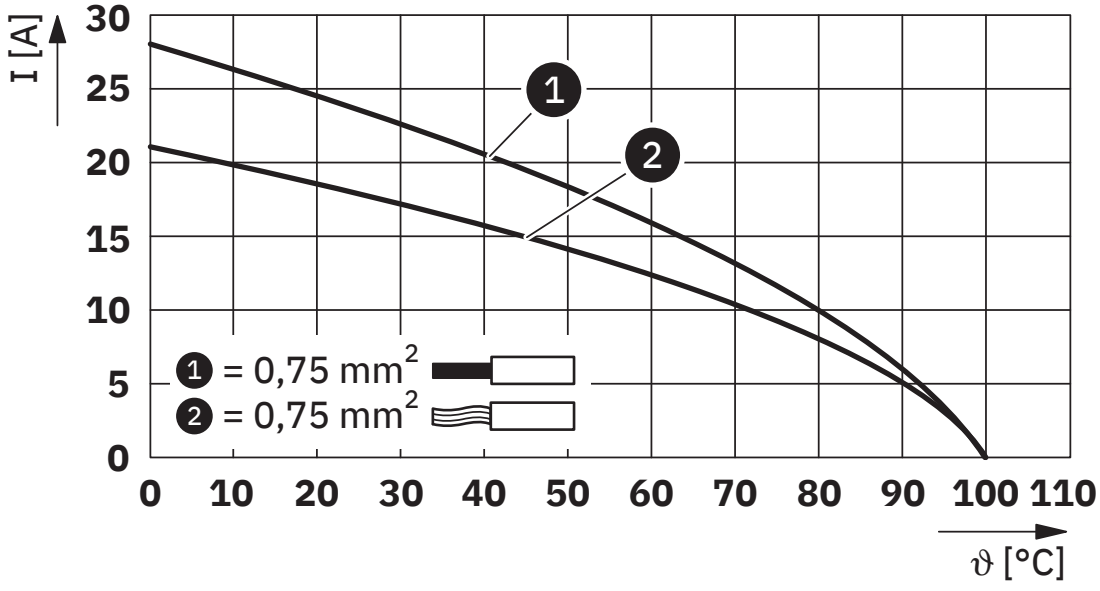

Derating diagram for 0.75 mm²

Approvals

To download certificates, visit the product detail page: https://www.phoenixcontact.com/us/products/1065121

cULus Recognized
Approval ID: E468743

VDE Zeichengenehmigung
Approval ID: 40051487

Classifications

ECLASS

ECLASS-13.0	27440605
ECLASS-15.0	27440605

ETIM

ETIM 10.0	EC002560

UNSPSC

UNSPSC 21.0	39121400

Environmental product compliance

EU RoHS

Fulfills EU RoHS substance requirements	Yes, No exemptions

China RoHS

Environment friendly use period (EFUP)	EFUP-E
	No hazardous substances above the limits

EU REACH SVHC

REACH candidate substance (CAS No.)	No substance above 0.1 wt%

Phoenix Contact 2026 © - all rights reserved
https://www.phoenixcontact.com

Phoenix Contact USA
586 Fulling Mill Road
Middletown, PA 17057, United States
(+717) 944-1300
info@phoenixcon.com