SOL-SC-2ST-0-DC-1MPPT-2000 - String combiner box (SCB)

1055626

https://www.phoenixcontact.com/us/products/1055626

Please be informed that the data shown in this PDF document is generated from our online catalog. Please find the complete data in the user documentation. Our general terms of use for downloads are valid.



String combiner box (SCB); MPP voltage: 1000 V DC; number of strings: 2; number of supported MPP trackers: 1; surge protection: T2; equipment: without special equipment; type of cable entry: Cable gland

Product description

The Solarline string combiner boxes (SCBs) are used in both small rooftop systems and large ground-mounted systems. The main tasks of the SCBs are the surge protection of the photovoltaic system, collecting strings (if necessary), and looping through the protective equipotential bonding conductor for the local equipotential bonding.
Further functions are optional and depend on the equipment.

Examples of optional functions include protecting the strings with string fuses and disconnecting the strings via DC switch disconnectors or DC fire department switches.
You can determine the full scope of functions of the SCB from its item designation (see the application note for the type key of the SCB, which can be downloaded in the “Downloads” area).

Your advantages

- Fast installation and startup
- Standard-compliant switchgear and controlgear assembly, thanks to use of DIN EN 61439
- Application-oriented consultation
- Large portfolio of string combiner boxes in stock

ELEKTROGERÄTE RÜCKNAHME

Commercial data

Item number	1055626
Packing unit	1 pc
Minimum order quantity	1 pc
Product key	DTHTAA

SOL-SC-2ST-0-DC-1MPPT-2000 - String combiner box (SCB)

1055626

https://www.phoenixcontact.com/us/products/1055626

GTIN	4055626693309
Weight per piece (including packing)	1,811 g
Weight per piece (excluding packing)	1,774 g
Country of origin	DE

Technical data

Product properties

Product type	String combiner box (SCB)
Design	without special equipment

Insulation characteristics

Protection class	II

Electrical properties

General

MPP voltage U_n	max. 1000 V DC
Open-circuit voltage U_{OC}	max. 1100 V DC
Current per string I_{max}	max. 20 A
Total current per MPP tracker	max. 40 A

Indicator/remote signaling

Connection name	Remote fault indicator contact
Switching function	Changeover contact, floating

Surge protection

EN type	T2
IEC test classification	T2
Protection level U_p	≤ 4.2 kV
Total discharge current I_{Total} (8/20) µs	40 kA
Short-circuit current rating I_{SCPV}	40 A

Input data

DC

Number of inputs (Strings per MPP tracker)	2
Number of supported MPP trackers	1

Output data

DC

Number of outputs (MPP tracker)	1
Number of outputs (± per MPP tracker)	1 (Per MPP tracker)

Connection data

DC input

Type of cable entry	Cable gland
Connection method	Push-in connection
Cable cross-section range	2.5 mm² ... 6 mm²
External cable diameter	3 mm ... 6.5 mm

Lightning protection equipotential bonding & ground conductor

Type of cable entry	Cable gland
Connection method	Push-X-connection
Cable cross section	2x 16 mm²
External cable diameter	2x 6 mm ... 12 mm

DC output

Type of cable entry	Cable gland
Connection method	Push-in connection
Cable cross-section range	2.5 mm² ... 6 mm²
External cable diameter	3 mm ... 6.5 mm

Remote fault indicator contact

Connection method	Plug-in/screw connection via COMBICON
Conductor cross-section flexible	0.25 mm² ... 1.5 mm²

Dimensions

Housing

Width	180 mm
Height	180 mm
Depth	111 mm

Material specifications

Material Housing	Polycarbonate
Material Cover/door	Polycarbonate (transparent)
Flammability rating according to UL 94	V2

Environmental and real-life conditions

Ambient conditions

Degree of protection	IP65
Impact strength	IK08
Ambient temperature (operation)	-20 °C ... 55 °C
Solar radiation conditions	Outdoor installation - without direct sunlight

Standards and regulations

Standard designation	Low-voltage switchgear and controlgear assemblies - Part 2: Power switchgear and controlgear assemblies
Standards/specifications	EN 61439-2

Drawings

Dimensional drawing

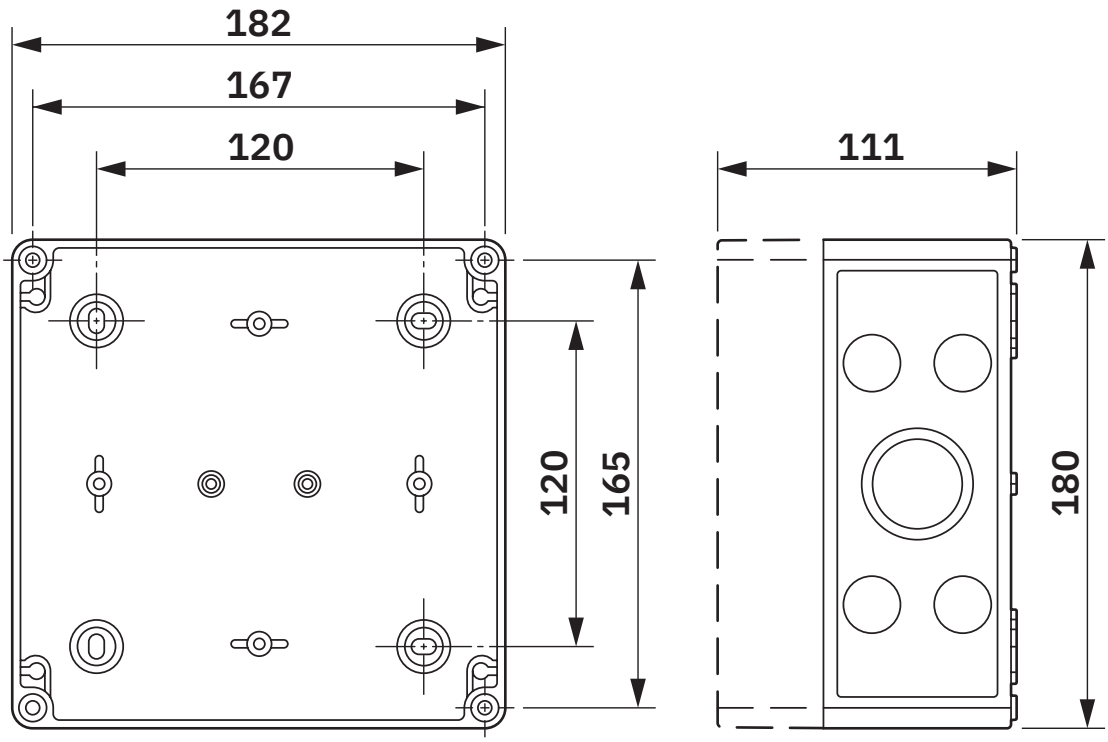

Housing dimensions

Connection diagram

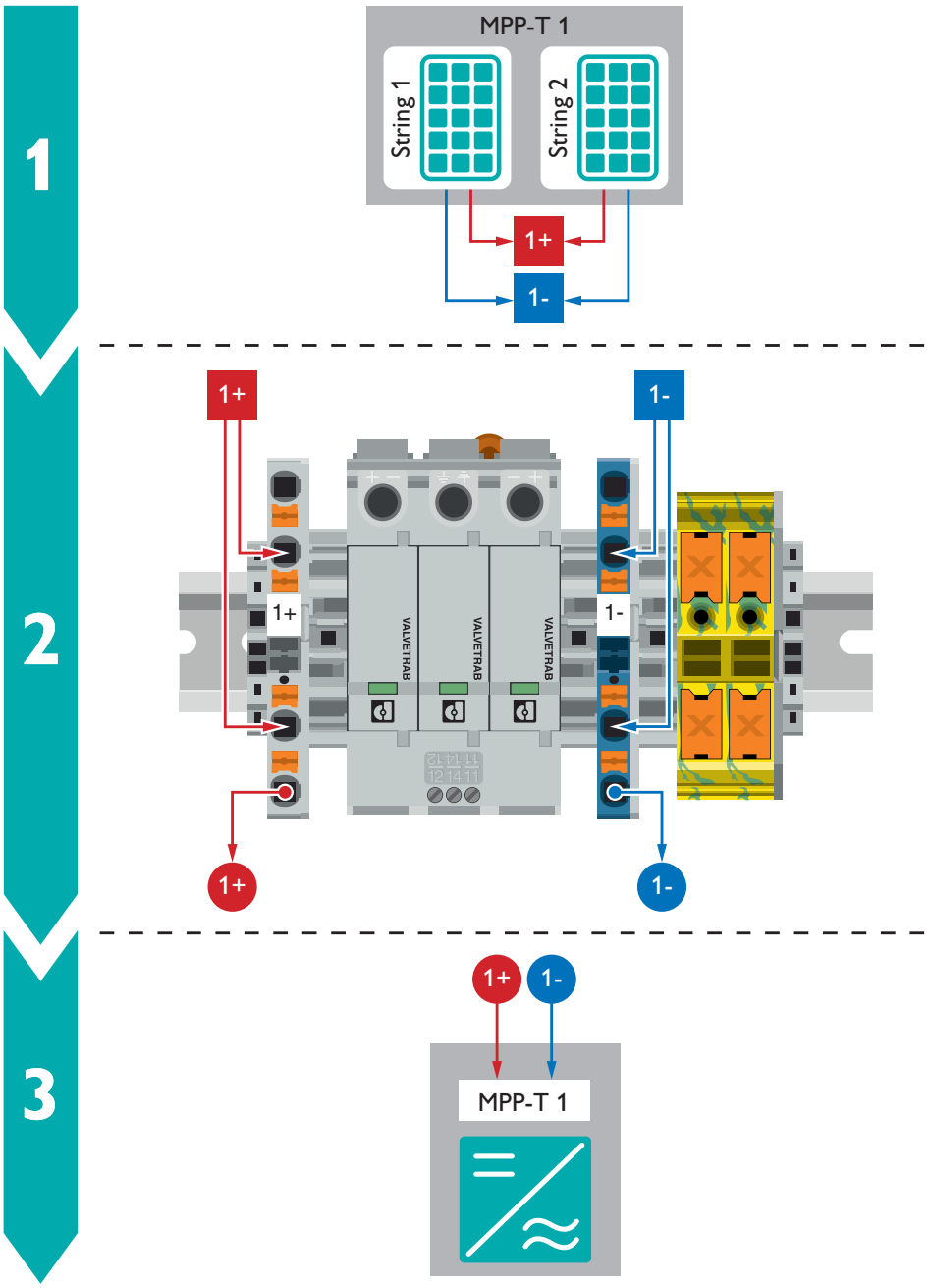

Connection of the PV strings, as well as connection to the inverter

Classifications

ECLASS

ECLASS-13.0	27171490
ECLASS-15.0	22570203

ETIM

ETIM 10.0	EC003857

UNSPSC

UNSPSC 21.0	39121100

Environmental product compliance

EU RoHS

Fulfills EU RoHS substance requirements	Yes, No exemptions

EU REACH SVHC

REACH candidate substance (CAS No.)	No substance above 0.1 wt%

Phoenix Contact 2026 © - all rights reserved
https://www.phoenixcontact.com

Phoenix Contact USA
586 Fulling Mill Road
Middletown, PA 17057, United States
(+717) 944-1300
info@phoenixcon.com