FLX-D25F/16CH/AI/FU/SIOP/TDC3K - Termination board

1050543

https://www.phoenixcontact.com/us/products/1050543

Please be informed that the data shown in this PDF document is generated from our online catalog. Please find the complete data in the user documentation. Our general terms of use for downloads are valid.



Migration board for converting TDC3000 to modern control platforms, analog input, 16 channel, fusing

Your advantages

- Panel mount to existing TDC3000 chassis
- Compatable with existing pluggable field wiring connectors
- DSUB control side connection
- Per channel fusing
- Terminal blocks for power supply

Commercial data

Item number	1050543
Packing unit	1 pc
Minimum order quantity	1 pc
Sales key	C421
Product key	DK2B8H
GTIN	4055626666167
Weight per piece (including packing)	389.4 g
Weight per piece (excluding packing)	360 g
Customs tariff number	85371098
Country of origin	US

Technical data

Product properties

Product type	Interface module

Insulation characteristics

Overvoltage category	II
Pollution degree	2

Electrical properties

Operating voltage U_{max} (DC)	≤ 30 V DC (Power supply)
Current (per branch)	≤ 250 mA (fuse limited)
Current (Voltage supply)	≤ 5 A (fuse limited)

Supported controller: HONEYWELL TDC3000

Suitable I/O card	TAIH01
	TAIH02
	TAIH03

Connection data

Controller level

Connection method	D-SUB-25 female connector
Number of connections	2
Number of positions	25

Field level

Connection method	pluggable

Dimensions

Item dimensions

Width	152.4 mm
Height	120.7 mm
Depth	38.3 mm

Environmental and real-life conditions

Ambient conditions

Ambient temperature (operation)	-40 °C ... 70 °C
Ambient temperature (storage/transport)	-40 °C ... 75 °C
Altitude	< 2000 m
Permissible humidity (operation)	< 90 %

Mounting

Mounting position	any

Notes

Notes on operation	For proper use, the specifications of the installation directive (see Downloads) must be observed. For applications or use with third-party products, the specifications, and the safety and warning instructions of the respective third-party manufacturer must also be met.

Drawings

Dimensional drawing

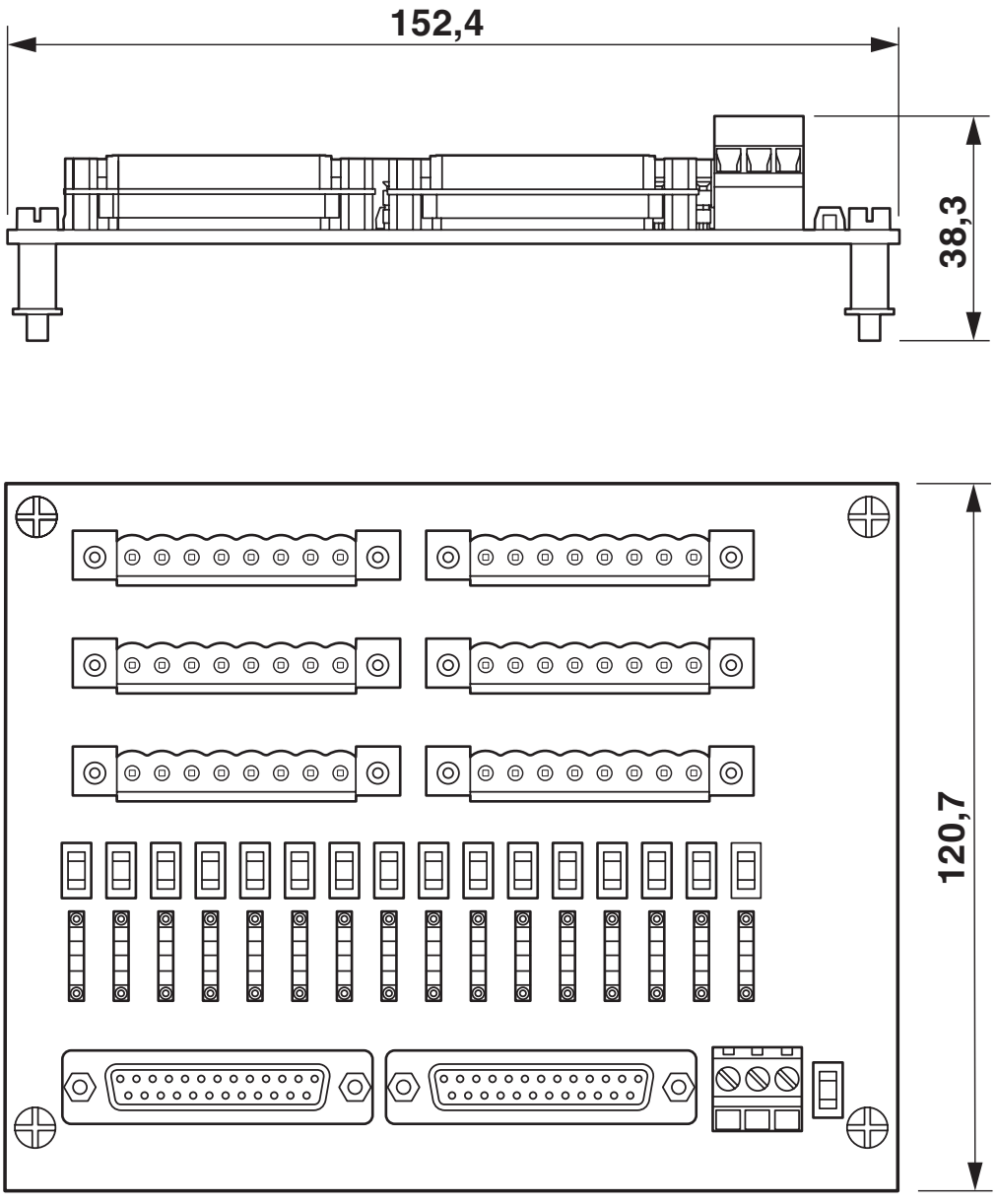

Circuit diagram

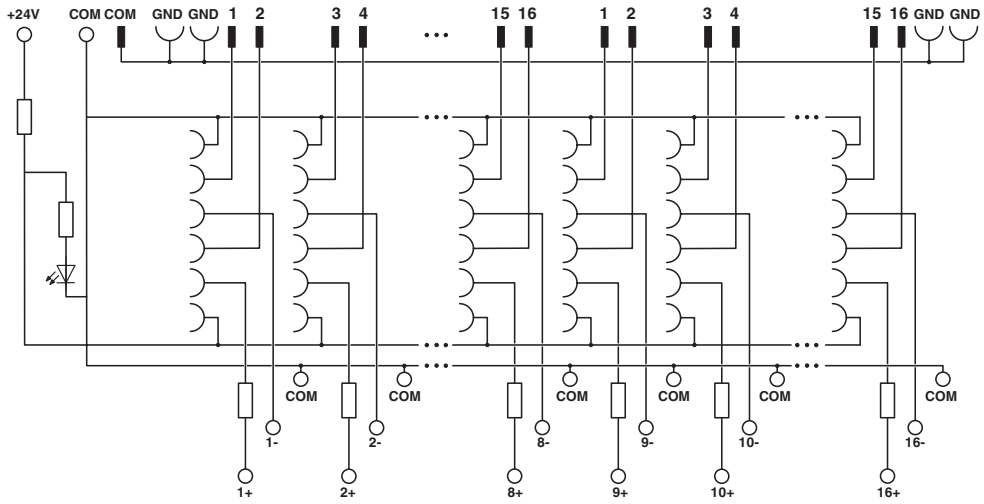

Approvals

To download certificates, visit the product detail page: https://www.phoenixcontact.com/us/products/1050543

CSA
Approval ID: 108860_0_000

	Nominal voltage U_N	Nominal current I_N	Cross section AWG	Cross section mm^2
keine				
Power	-	5 A	-	-
Signal	-	0.25 A	-	-
Output	-	0.25 A	-	-

cUL Recognized
Approval ID: FILE E 238705

	Nominal voltage U_N	Nominal current I_N	Cross section AWG	Cross section mm^2
keine				
Power	-	5 A	-	-
Signal	-	0.25 A	-	-
Output	-	0.25 A	-	-

UL Recognized
Approval ID: FILE E 238705

	Nominal voltage U_N	Nominal current I_N	Cross section AWG	Cross section mm^2
keine				
Power	-	5 A	-	-
Signal	-	0.25 A	-	-
Output	-	0.25 A	-	-

CSAus
Approval ID: 108860_0_000

	Nominal voltage U_N	Nominal current I_N	Cross section AWG	Cross section mm^2
keine				
Power	-	5 A	-	-
Signal	-	0.25 A	-	-
Output	-	0.25 A	-	-

Classifications

ECLASS

ECLASS-13.0	27141152
ECLASS-15.0	27141152

ETIM

ETIM 10.0	EC002780

UNSPSC

UNSPSC 21.0	39121400

Environmental product compliance

EU RoHS

Fulfills EU RoHS substance requirements	Yes
Exemption	6(c), 7(a), 7(c)-I

EU REACH SVHC

REACH candidate substance (CAS No.)	Lead(CAS: 7439-92-1)
SCIP	bf17f172-1703-4c7b-ac8b-2b3e14edfe0e

Phoenix Contact 2026 © - all rights reserved
https://www.phoenixcontact.com

Phoenix Contact USA
586 Fulling Mill Road
Middletown, PA 17057, United States
(+717) 944-1300
info@phoenixcon.com