IPD WD 5P2,5 1,0 M25 GY - Panel feed-through

1047364

https://www.phoenixcontact.com/us/products/1047364

Please be informed that the data shown in this PDF document is generated from our online catalog. Please find the complete data in the user documentation. Our general terms of use for downloads are valid.



Panel feed-through, Direct connection, connection method: Single wires/ Push-in connection, number of positions: 4+PE, M25, 0.5 mm^2 ... 2.5 mm^2, 450 V, 16 A, light gray, external cable diameter: 7 mm ... 11 mm and 11 mm ... 16 mm, cable length: 1 m

Your advantages

- Convenient: quick and easy assembly without special tools
- Fast and easy startup, thanks to tool-free Push-in connection technology
- Reliable installation in harsh environments with IP66, IP68, and IP69K throughout the entire system

Commercial data

Item number	1047364
Packing unit	1 pc
Minimum order quantity	1 pc
Sales key	BF51
Product key	AF6ICB
GTIN	4055626648514
Weight per piece (including packing)	231.7 g
Weight per piece (excluding packing)	231.7 g
Customs tariff number	85366990
Country of origin	CN

Technical data

Notes

Assembly note	NOTE: Observe the permissible bending radii when routing cables, since the degree of protection may be at risk if the bending forces are too high. Reduce mechanical loads upstream of the connector, e.g., by using cable ties.

Product properties

Product type	Panel feed-through
Product family	IPD
Number of positions	5
Connection profile	4+PE
Position marking	1, 2, 3, N, PE

Insulation characteristics

Overvoltage category	III
Degree of pollution	3

Connection data

Connection technology

Connection method On the device side	Single wires
Connection method On the field side	Push-in connection
Frequency of connections between conductors of the same cross section	max. 10

Conductor connection

Conductor cross-section flexibel	0.5 mm² ... 2.5 mm²
Conductor cross-section solid	0.5 mm² ... 2.5 mm²
Conductor cross-section with ferrule	0.5 mm² ... 2.5 mm²
Connection cross section AWG	20 ... 14

Dimensions

Dimensional drawing	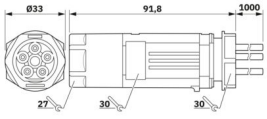
Width	33 mm
Length	91.8 mm

Electrical properties

Rated surge voltage (III/3)	6 kV
Rated current	16 A
Rated voltage (III/3)	450 V

Nominal voltage U_N	450 V AC
	450 V DC
Nominal current I_N	16 A (observe derating)

Mechanical properties

Mechanical data

Insertion/withdrawal cycles	10

Material specifications

Color (Housing)	light gray (RAL 7035)
Material Housing	PA
Material Seal	NBR (Field)
	EPDM (Device)
Contact material	Cu
Contact surface material	Ni/Sn

Cable/line

Cable length	1 m
External cable diameter	7 mm ... 11 mm
	11 mm ... 16 mm
Position marking	1, 2, 3, N, PE
Single wire, color	brown, black, gray, blue, green-yellow
Halogen-free	no

Mounting

Mounting type	Front mounting M25

Environmental and real-life conditions

Ambient conditions

Degree of protection	IP66
	IP68 (2 m / 24 h)
	IP69K
Impact strength	IK07
Ambient temperature (operation)	-40 °C ... 90 °C (T = 45 °C)
Temperature when conductor connected	-5 °C ... 50 °C
Ambient temperature (storage/transport)	-40 °C ... 90 °C
Resistance to UV radiation	yes

Drawings

Dimensional drawing

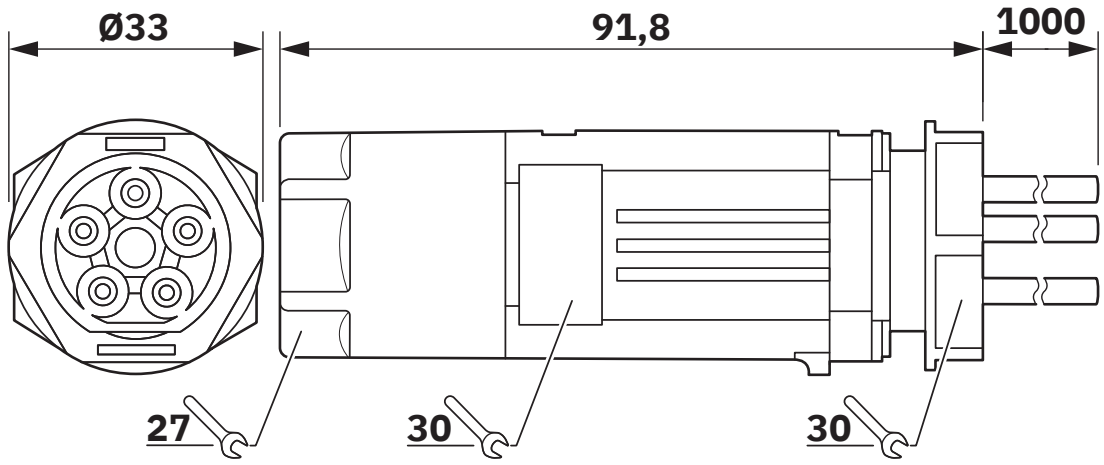

Diagram

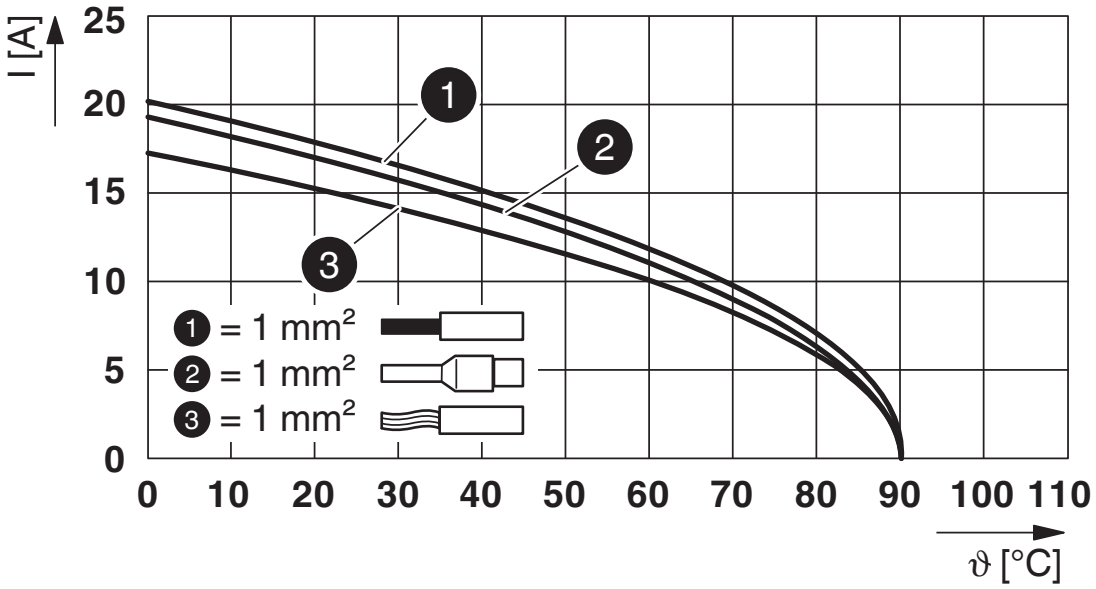

Derating diagram for 1.0 mm²

Diagram

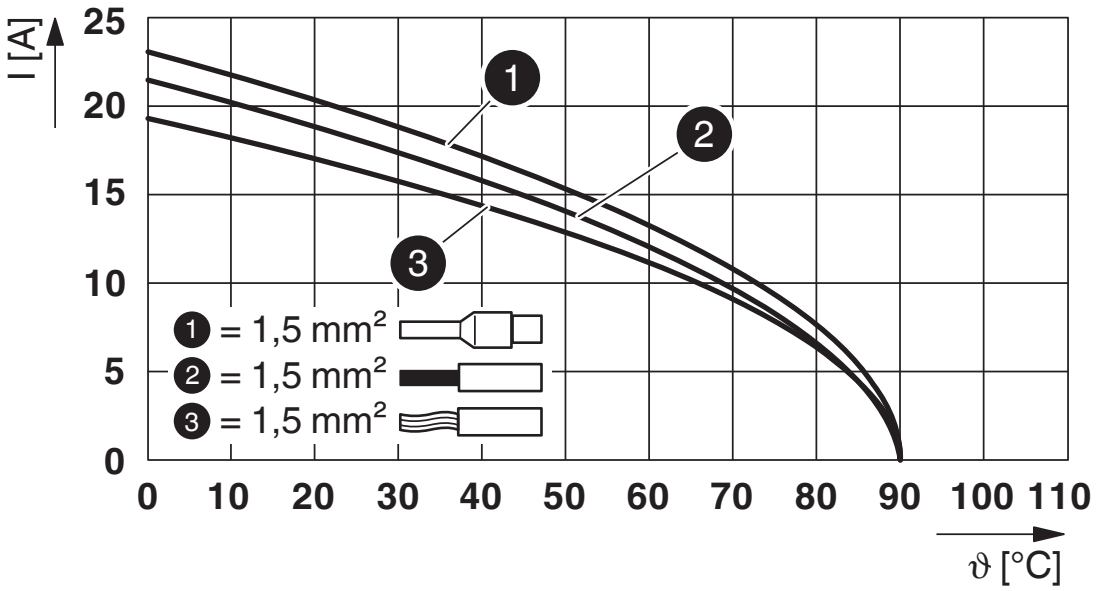

Derating diagram for 1.5 mm²

Diagram

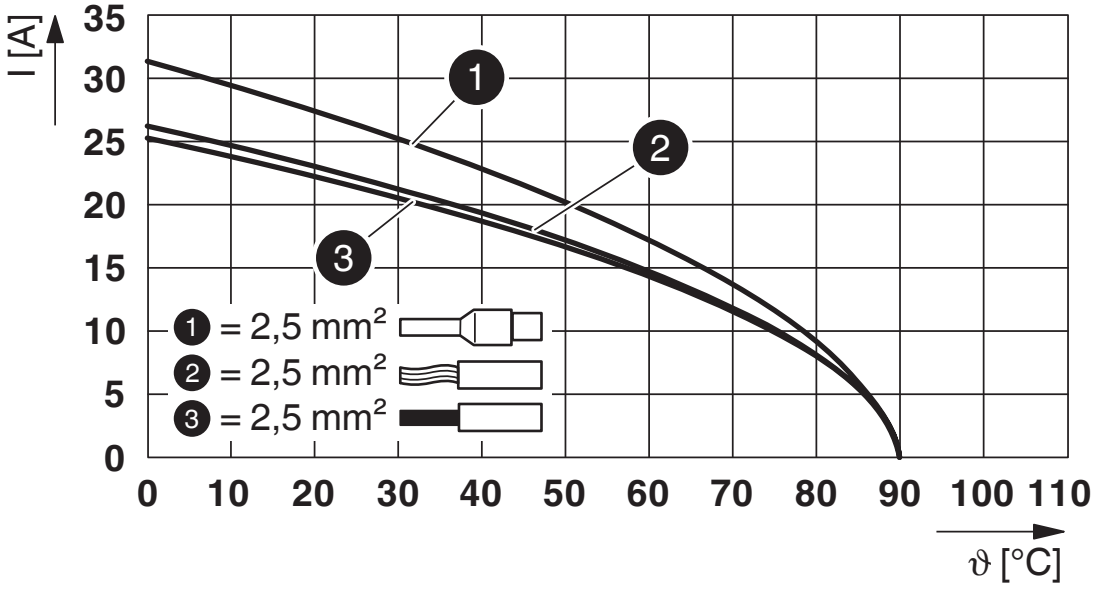

Derating diagram for 2.5 mm²

Classifications

ECLASS

ECLASS-13.0	27440602
ECLASS-15.0	27440602

ETIM

ETIM 10.0	EC002566

UNSPSC

UNSPSC 21.0	39121500

Environmental product compliance

EU RoHS

Fulfills EU RoHS substance requirements	Yes, No exemptions

China RoHS

Environment friendly use period (EFUP)	EFUP-E
	No hazardous substances above the limits

EU REACH SVHC

REACH candidate substance (CAS No.)	No substance above 0.1 wt%

Phoenix Contact 2026 © - all rights reserved
https://www.phoenixcontact.com

Phoenix Contact USA
586 Fulling Mill Road
Middletown, PA 17057, United States
(+717) 944-1300
info@phoenixcon.com