BC 107,6 OT 0C0C0C0C KMGY - Upper housing part

1046365

https://www.phoenixcontact.com/us/products/1046365

Please be informed that the data shown in this PDF document is generated from our online catalog. Please find the complete data in the user documentation. Our general terms of use for downloads are valid.



DIN rail housing for use in distribution boards in accordance with DIN 43880, modular upper housing part, width: 107.6 mm, height: 89.7 mm, depth: 54.85 mm, color: light gray (similar RAL 7035)

Your advantages

- Coordinated housing and connection system for faster device development
- Individual online configuration for diverse applications in building automation
- Variety of connection technology
- Can be mounted on the DIN rail or the wall
- With DIN-rail-mountable bus connector and power connector system as an option
- Tool-free mounting
- Available in overall widths from 1 ... 12 HP (17.8 mm ... 215.6 mm)
- Compliant with DIN EN 43880

Commercial data

Item number	1046365
Packing unit	10 pc
Minimum order quantity	10 pc
Note	Made to order (non-returnable)
Sales key	AC10
Product key	ACHBAB
GTIN	4055626640723
Weight per piece (including packing)	58.08 g
Weight per piece (excluding packing)	50.57 g
Customs tariff number	84879090
Country of origin	PL

Technical data

Notes

Assembly note	Please observe the application note in the download area.

Product properties

Product type	Upper housing part
Housing type	DIN rail housing for use in distribution boards in accordance with DIN 43880
Housing type	Modular building installation housings
Housing series	BC
Product family	BC 107,6..
Number (Connection openings)	0
Ventilation openings present	no
Anzahl der Etagen Housing (Makro)	1 (Both sides)

Dimensions

Dimensional drawing	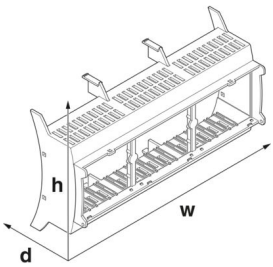
Width	107.6 mm
Height	89.7 mm
Depth	54.85 mm
Horizontal pitch	6 HP

PCB design

PCB thickness	1.4 mm ... 1.8 mm

Material specifications

Color (Upper housing part)	light gray (RAL 7035)
Material Upper housing part	PC
Flammability rating according to UL 94	V0

Environmental and real-life conditions

Power dissipation single housing for 20 °C

Ambient temperature	20 °C
Reduction factor	1
Mounting position	vertical
Power dissipation	13.08 W

Power dissipation single housing for 30 °C

Ambient temperature	30 °C
Reduction factor	0.84
Mounting position	vertical
Power dissipation	11 W

Power dissipation single housing for 40 °C

Ambient temperature	40 °C
Reduction factor	0.72
Mounting position	vertical
Power dissipation	9.4 W

Power dissipation single housing for 50 °C

Ambient temperature	50 °C
Reduction factor	0.6
Mounting position	vertical
Power dissipation	7.85 W

Power dissipation single housing for 60 °C

Ambient temperature	60 °C
Reduction factor	0.48
Mounting position	vertical
Power dissipation	6.3 W

Power dissipation single housing for 70 °C

Ambient temperature	70 °C
Reduction factor	0.38
Mounting position	vertical
Power dissipation	5 W

Vibration test

Specification	IEC 60068-2-6:2007-12
Frequency	10 - 150 - 10 Hz
Sweep speed	1 octave/min
Amplitude	0.15 mm (10 Hz ... 58.1 Hz)
Acceleration	2g (58.1 Hz ... 150 Hz)
Test duration per axis	2.5 h
Test directions	X-, Y- and Z-axis

Glow-wire test

Specification	IEC 60695-2-11:2014-02
Temperature	850 °C
Time of exposure	30 s

Mechanical strength / tumbling barrel

Specification	IEC 60068-2-31:2008-05
Height of fall	50 cm

Frequency	50

Shocks

Specification	IEC 60068-2-27:2008-02
Pulse shape	Half-sine
Acceleration	15g
Shock duration	11 ms
Number of shocks per direction	3
Test directions	X-, Y- and Z-axis (pos. and neg.)

Degree of protection (IP code)

Specification	IEC 60529:1989-11 + AMD 1:1999-11 + AMD 2:2013-08

Ambient conditions

Max. IP code to attain	IP20
Ambient temperature (operation)	-40 °C ... 105 °C (depending on power dissipation)
Ambient temperature (storage/transport)	-40 °C ... 70 °C
Ambient temperature (assembly)	-5 °C ... 100 °C
Relative humidity (storage/transport)	95 %

PCB data

Number of PCB holders	12
Type of PCB mount	Latching
Thickness of the PCB	1.4 mm ... 1.8 mm

Mounting

Mounting type	Snap in

Packaging specifications

Type of packaging	packed in cardboard
Outer packaging type	Carton

Drawings

Dimensional drawing

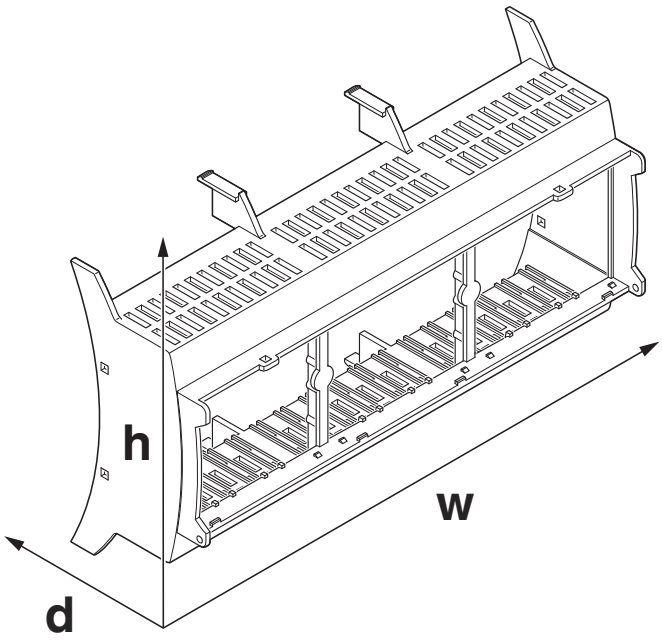

Schematic figure for illustrating the item dimensions. The figure is not of the desired product. For further details, refer to the product drawings in the “Downloads” tab.

Diagram

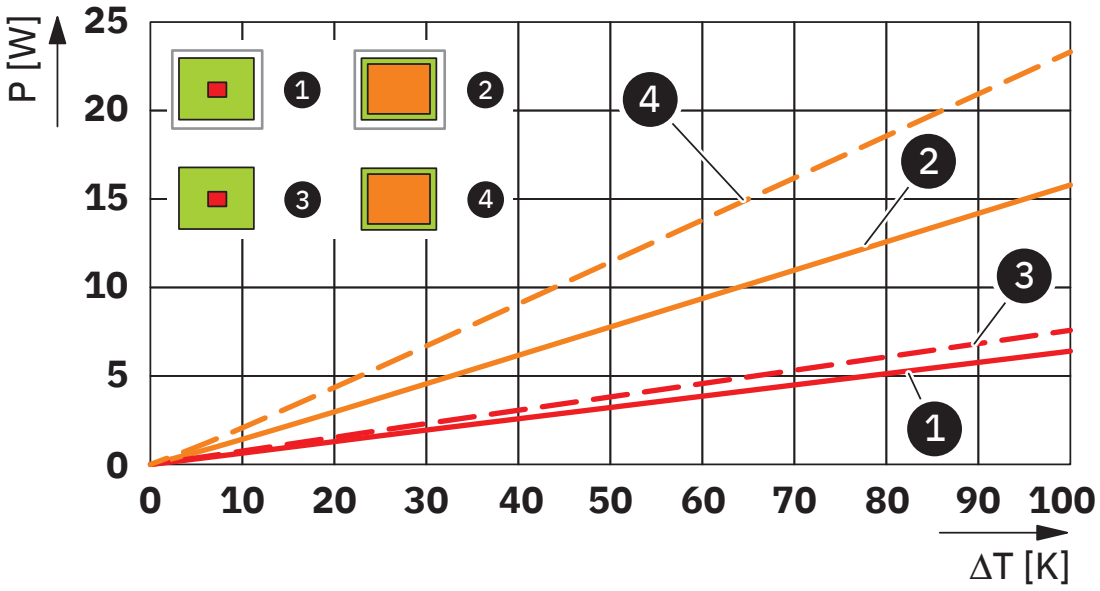

Power dissipation diagram for 0 K ... 100 K

Diagram

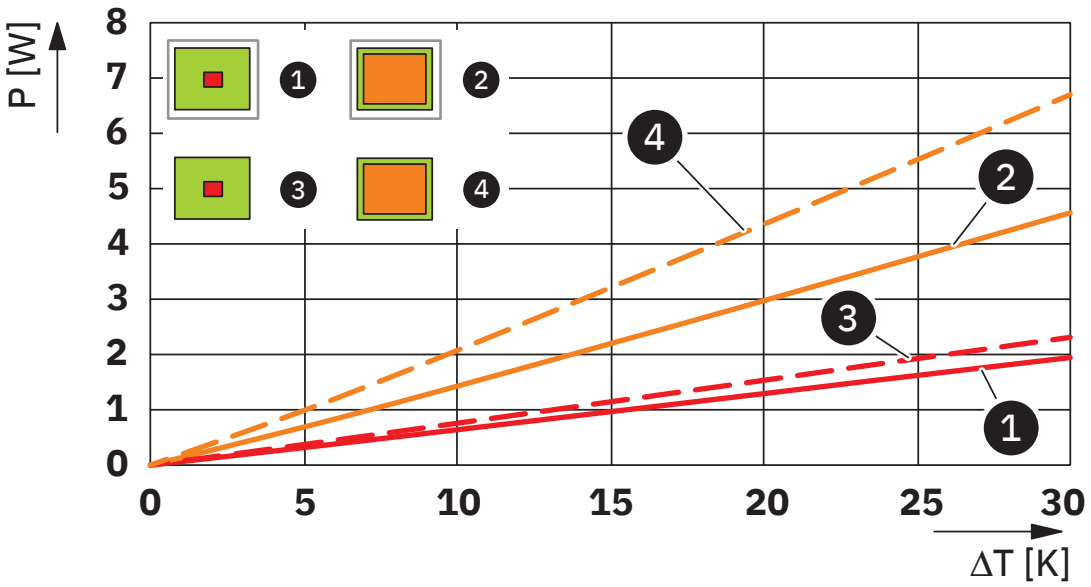

Power dissipation diagram for 0 K ... 30 K

Approvals

To download certificates, visit the product detail page: https://www.phoenixcontact.com/us/products/1046365

UL Recognized
Approval ID: E240868

Classifications

ECLASS

ECLASS-13.0	27190603
ECLASS-15.0	27190603

ETIM

ETIM 10.0	EC002779

UNSPSC

UNSPSC 21.0	31261500

Environmental product compliance

EU RoHS

Fulfills EU RoHS substance requirements	Yes, No exemptions

China RoHS

Environment friendly use period (EFUP)	EFUP-E
	No hazardous substances above the limits

EU REACH SVHC

REACH candidate substance (CAS No.)	No substance above 0.1 wt%

EF3.1 Climate Change

CO2e kg	0.145 kg CO2e

Phoenix Contact 2026 © - all rights reserved
https://www.phoenixcontact.com

Phoenix Contact USA
586 Fulling Mill Road
Middletown, PA 17057, United States
(+717) 944-1300
info@phoenixcon.com