HC-B24/10-ADP-SS - Adapter plate

1034213

https://www.phoenixcontact.com/us/products/1034213

Please be informed that the data shown in this PDF document is generated from our online catalog. Please find the complete data in the user documentation. Our general terms of use for downloads are valid.

Adapter plate, B24



Commercial data

Item number	1034213
Packing unit	1 pc
Minimum order quantity	1 pc
Sales key	BF66
Product key	AF7AZD
GTIN	4055626539690
Weight per piece (including packing)	121 g
Weight per piece (excluding packing)	120 g
Customs tariff number	39269097
Country of origin	DE

Technical data

Notes

General	For wall cutouts of type B24

Product properties

Product type	Adapter plate
Type	B24
Seal present	yes

Dimensions

Dimensional drawing	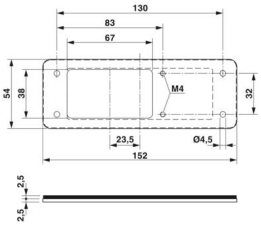
Width	53 mm
Height	5 mm
Length	151 mm
Drill hole distance, horizontal	130 mm
Drill hole distance, vertical	32 mm
Hole diameter	5.5 mm

Material specifications

Material	Stainless steel 1.4301/AISI 304
Seal material	NBR/SBR (Flat gasket)

Environmental and real-life conditions

Ambient conditions

Degree of protection	IP54
	IP65
Ambient temperature (operation)	-40 °C ... 125 °C

Mounting

Assembly note	Torque of the mounting screws 1 ... 2 Nm

Drawings

Dimensional drawing

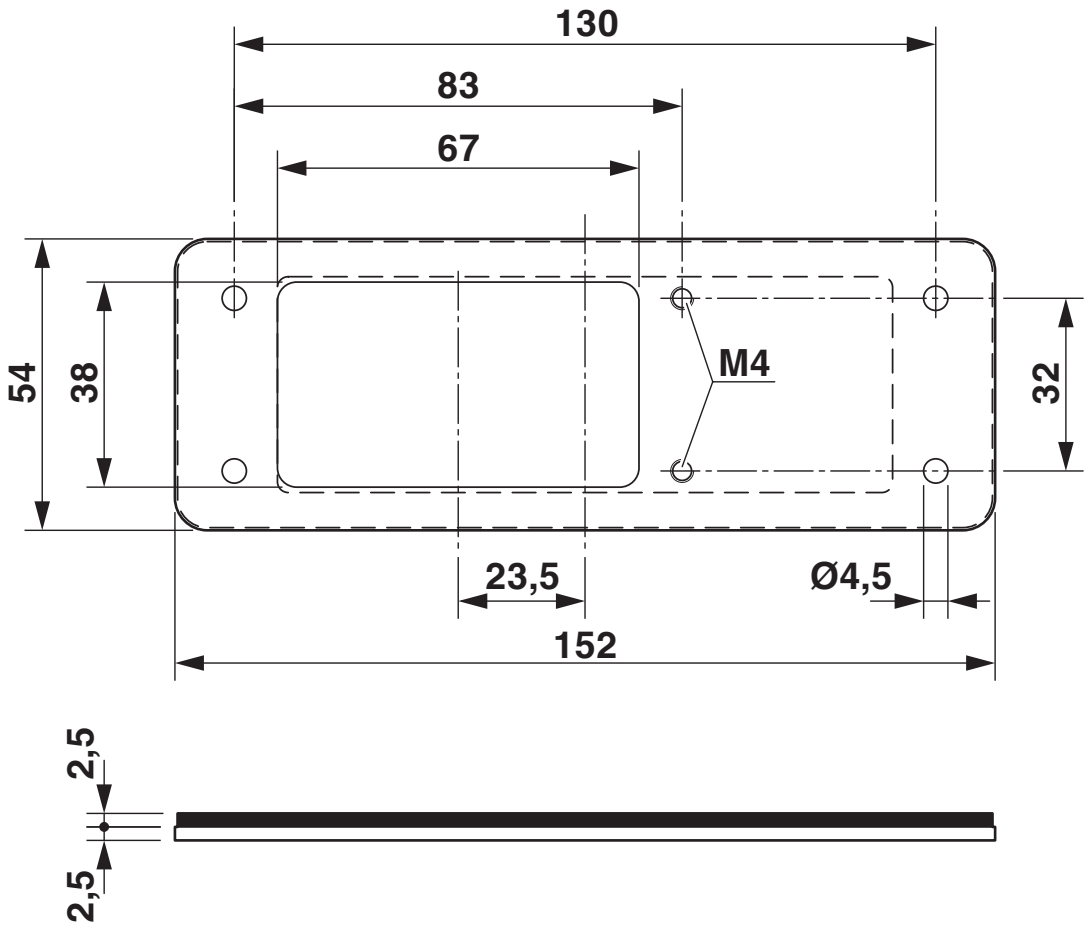

Dimensional drawing

Classifications

ECLASS

ECLASS-13.0	27440201
ECLASS-15.0	27440201

ETIM

ETIM 10.0	EC002309

UNSPSC

UNSPSC 21.0	31261500

Environmental product compliance

EU RoHS

Fulfills EU RoHS substance requirements	Yes, No exemptions

China RoHS

Environment friendly use period (EFUP)	EFUP-E
	No hazardous substances above the limits

EU REACH SVHC

REACH candidate substance (CAS No.)	No substance above 0.1 wt%

EF3.1 Climate Change

CO2e kg	2.338 kg CO2e

Phoenix Contact 2026 © - all rights reserved
https://www.phoenixcontact.com

Phoenix Contact USA
586 Fulling Mill Road
Middletown, PA 17057, United States
(+717) 944-1300
info@phoenixcon.com