ELR 1-SC-24DC/600AC-30 - Solid-state contactor

1032921

https://www.phoenixcontact.com/us/products/1032921

Please be informed that the data shown in this PDF document is generated from our online catalog. Please find the complete data in the user documentation. Our general terms of use for downloads are valid.



Single-phase solid-state contactor, input voltage: 24 V DC, output current: 30 A, zero voltage switch

Commercial data

Item number	1032921
Packing unit	1 pc
Minimum order quantity	1 pc
Sales key	C471
Product key	DK6831
GTIN	4055626537924
Weight per piece (including packing)	264 g
Weight per piece (excluding packing)	256 g
Customs tariff number	85364190
Country of origin	MT

Technical data

Product properties

Product type	Solid-state contactor

Electrical properties

Number of phases	1
Maximum power dissipation for nominal condition	28 W
Mains type	1-phase

Input data

Control

Input name	Control input
Rated actuating voltage U_C	24 V DC
Triggering voltage range	4 V DC ... 32 V DC
Rated actuating current I_C	approx. 12 mA
Switching threshold	≤ 1 V DC (“0” signal)
	≥ 4 V DC (“1” signal)
Operating voltage display	Green LED
Transmission frequency	25 Hz

Output data

Load output

Operating voltage range	42 V AC ... 660 V AC
Rated operating current at AC-51	30 A
Rated operating current at AC-53a	15 A (T_A = 25 °C)
	5 A (T_A = 40 °C)
Peak offstate voltage	1200 V
Mains frequency	45 Hz
	65 Hz
Load current range	250 mA ... 30 A (see to derating)
Leakage current	< 3 mA (In off state)
Residual voltage	< 1 V
Surge current	600 A (t = 10 ms)
Max. load value	1800 A^2s
Protective circuit	Varistor
Phase angle cos phi min	0.5

Connection data

Control circuits

Connection method	Screw connection
Stripping length	8 mm

Screw thread	M3
Conductor cross-section rigid	0.5 mm² ... 2.5 mm²
Conductor cross-section flexible	0.5 mm² ... 2.5 mm²
Conductor cross-section AWG	18 ... 12
Tightening torque	0.5 Nm ... 0.6 Nm

Load circuit

Connection method	Screw connection
Stripping length	12 mm
Screw thread	M4
Conductor cross-section rigid	2.5 mm² ... 6 mm²
Conductor cross-section flexible	1 mm² ... 4 mm²
Conductor cross-section AWG	14 ... 10
Tightening torque	1.5 Nm ... 2 Nm

Protective conductor connection

Connection method	Ring cable lug
Screw thread	M4
Tightening torque	1 Nm ... 1.5 Nm

Signaling

Operating voltage display	Green LED

Dimensions

Width	18 mm
Height	110 mm
Depth	103 mm

Material specifications

Color	gray (RAL 7042)

Environmental and real-life conditions

Ambient conditions

Ambient temperature (operation)	-30 °C ... 70 °C
Ambient temperature (storage/transport)	-40 °C ... 80 °C

Standards and regulations

Standards/regulations

Standards/regulations	EN 61000-4-2
	EN 61000-4-3
	EN 61000-4-4
	EN 61000-4-5
	EN 55011

Mounting

Mounting type	DIN rail mounting
Assembly note	can be aligned with ≥ 22.5 mm spacing
Mounting position	Vertical (horizontal DIN rail)

Drawings

Diagram

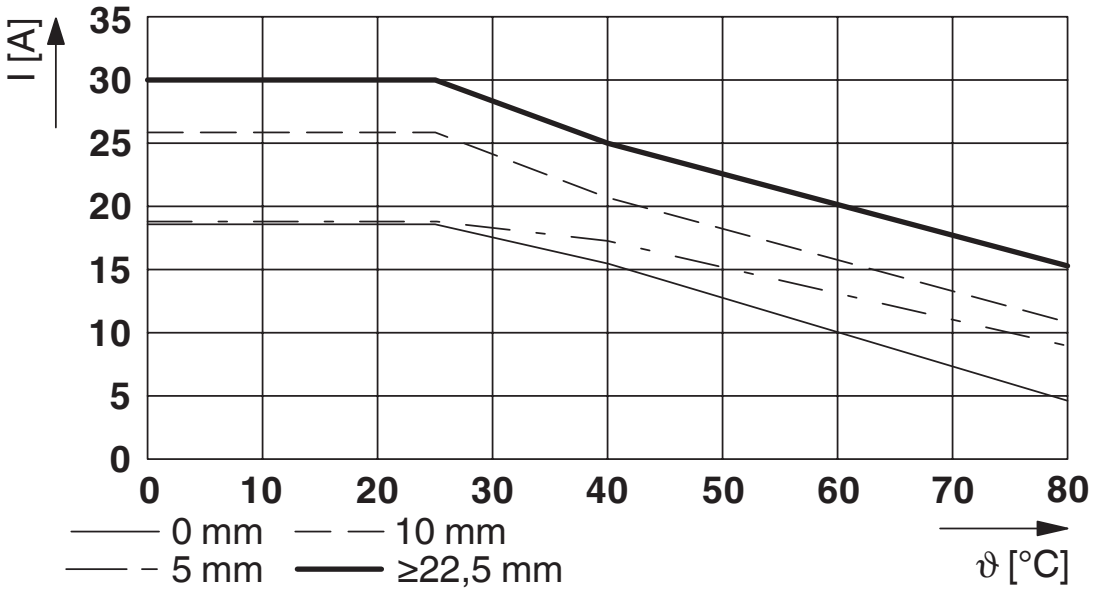

Block diagram

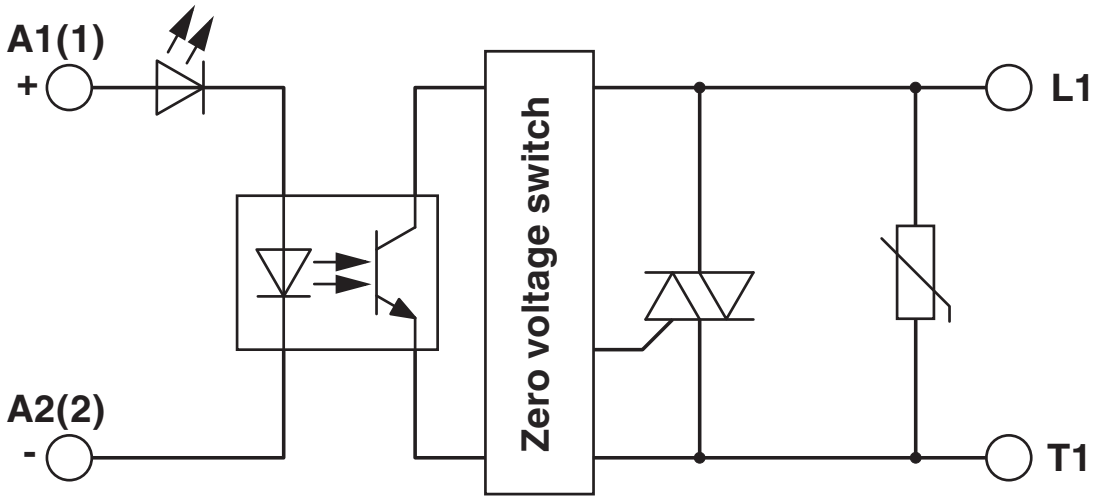

Approvals

To download certificates, visit the product detail page: https://www.phoenixcontact.com/us/products/1032921

UL Listed
Approval ID: FILE E 323771

cUL Listed
Approval ID: FILE E 323771

cULus Listed
Approval ID: E323771

Classifications

ECLASS

ECLASS-13.0	27371003
ECLASS-15.0	27371003

ETIM

ETIM 10.0	EC000066

UNSPSC

UNSPSC 21.0	39122300

Environmental product compliance

EU RoHS

Fulfills EU RoHS substance requirements	Yes
Exemption	6(c), 7(a), 7(c)-I

China RoHS

Environment friendly use period (EFUP)	EFUP-25
	An article-related China RoHS declaration table can be found in the download area for the respective article under "Manufacturer declaration". For all articles with EFUP-E, no China RoHS declaration table issued and required.

EU REACH SVHC

REACH candidate substance (CAS No.)	Lead(CAS: 7439-92-1)

Phoenix Contact 2026 © - all rights reserved
https://www.phoenixcontact.com

Phoenix Contact USA
586 Fulling Mill Road
Middletown, PA 17057, United States
(+717) 944-1300
info@phoenixcon.com