CC1,5-TS-2,50FPE S/T AU - Crimp contact

1029391

https://www.phoenixcontact.com/us/products/1029391

Please be informed that the data shown in this PDF document is generated from our online catalog. Please find the complete data in the user documentation. Our general terms of use for downloads are valid.



Crimp contact, Socket, turned, contact diameter: 1.5 mm, connection cross section: 2.5 mm^2 ... 2.5 mm^2, AWG 14...14 , contact material: CuZn

Commercial data

Item number	1029391
Packing unit	25 pc
Minimum order quantity	25 pc
Sales key	BF34
Product key	AF2CJB
GTIN	4055626530857
Weight per piece (including packing)	0.568 g
Weight per piece (excluding packing)	0.136 g
Customs tariff number	85366990
Country of origin	DE

Technical data

Mounting

Mounting type	Snap in

Product properties

Product type	Crimp contact
Contact material type	turned

Connection data

Connection technology

Contact connection type	Socket
Connection method	Crimp connection

Conductor connection

Connection cross section (flexible)	2.5 mm² ... 2.5 mm²
Connection cross section AWG (flexible)	14 ... 14

Material specifications

Material Contact	CuZn
Material Contact surface	Ni/Au

Dimensions

Dimensional drawing	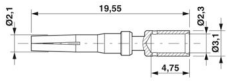
Diameter (Contact diameter)	1.5 mm

Mechanical properties

Mechanical data

Insertion/withdrawal cycles	≥ 100

Environmental and real-life conditions

Ambient conditions

Ambient temperature (operation)	-40 °C ... 85 °C

Drawings

Dimensional drawing

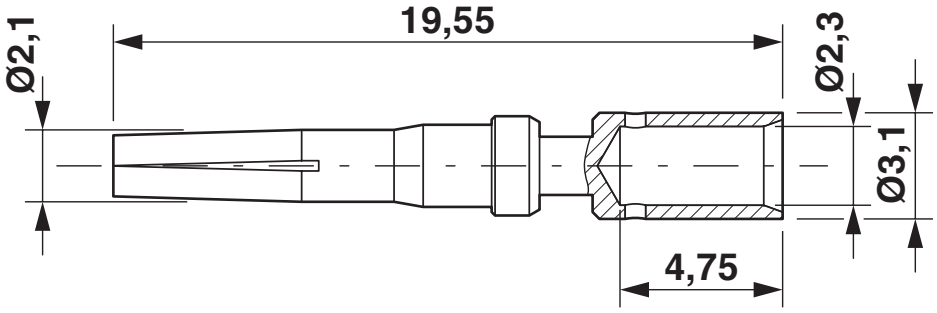

Crimp contact, diameter: 1.5 mm

Classifications

ECLASS

ECLASS-13.0	27440204
ECLASS-15.0	27440204

ETIM

ETIM 10.0	EC000796

UNSPSC

UNSPSC 21.0	39121500

Environmental product compliance

EU RoHS

Fulfills EU RoHS substance requirements	Yes, No exemptions

China RoHS

Environment friendly use period (EFUP)	EFUP-E
	No hazardous substances above the limits

EU REACH SVHC

REACH candidate substance (CAS No.)	No substance above 0.1 wt%

EF3.1 Climate Change

CO2e kg	0.402 kg CO2e

Phoenix Contact 2026 © - all rights reserved
https://www.phoenixcontact.com

Phoenix Contact USA
586 Fulling Mill Road
Middletown, PA 17057, United States
(+717) 944-1300
info@phoenixcon.com