PSR-MC73-5NO-1DO-24DC-SP - Safety relays

1015526

https://www.phoenixcontact.com/us/products/1015526

Please be informed that the data shown in this PDF document is generated from our online catalog. Please find the complete data in the user documentation. Our general terms of use for downloads are valid.



Safety relay for emergency stop, safety doors, light grids up to SIL 3, Cat. 4, PL e, 1- or 2-channel operation, cross-circuit detection, can be retriggered, off-/on delay of 0.2 s to 300 s, 5 enabling current paths, U_S = 24 V DC, plug-in Push-in terminal block

Your advantages

- Up to Cat. 4/PL e in accordance with EN ISO 13849-1, SIL 3 in accordance with EN IEC 62061
- Low housing width of only 22.5mm
- 1- and 2-channel control
- 5 enabling current paths, 1 digital signal output
- Manually monitored and automatic activation in a single device

ELEKTROGERÄTE RÜCKNAHME

Commercial data

Item number	1015526
Packing unit	1 pc
Minimum order quantity	1 pc
Sales key	DN01
Product key	DNA181
GTIN	4055626496566
Weight per piece (including packing)	246 g
Weight per piece (excluding packing)	214.73 g
Customs tariff number	85371098
Country of origin	DE

Technical data

Notes

Note on application

Note on application	Only for industrial use

Product properties

Product type	Safety relays
Product family	PSRmini
Application	Emergency stop
	Safety door
	Light grid
Control	1 and 2 channel
Relay type	Electromechanical relay with force-guided contacts in accordance with IEC/EN 61810-3

Insulation characteristics

Overvoltage category	III
Degree of pollution	2

Times

Typical response time	< 50 ms (automatic start)
	< 50 ms (manual, monitored start)
Typ. starting time with U_s	500 ms (with U_s when controlled via A1)
Typical release time	< 25 ms (when controlled via S12 and S22 (only for undelayed contacts))
	< 10 ms (when controlled via A1; applicative deactivation via A1/A2 is not permitted)
Delay time range	0.2 s ... 300 s ±5 % (can be set for 47/48/58)
Restart time	< 1 s (Boot time)
Recovery time	500 ms (following demand of the safety function)

Electrical properties

Maximum power dissipation for nominal condition	8.1 W (At U_S = 30 V, I_L^2 = 108 A²)
Nominal operating mode	100% operating factor
Rated insulation voltage	250 V AC
Rated surge voltage/insulation	See data sheet, section “Insulation coordination”.
	Safe isolation, reinforced insulation 6 kV between (A1, A2, S11, S12, S21, S22, S34, M1) and enabling current path (13/14) and enabling current path (23/24/34) and enabling current path (47/48/58)

Supply

Designation	A1/A2
Rated control circuit supply voltage U_S	19.2 V DC ... 30 V DC
Rated control circuit supply voltage U_S	24 V DC -20 % / +25 %

Rated control supply current I_S	typ. 80 mA
Power consumption at U_S	typ. 1.92 W
Inrush current	typ. 28 A (Δt = 30 µs at U_s)
Filter time	1 ms (For the logic. At A1 in the event of voltage dips at U_s)
Protective circuit	Serial protection against polarity reversal; Suppressor diode

Input data

General

Limit frequency	min. 0 Hz
	max. 1 Hz

Digital: Sensor circuit (S12, S22)

Description of the input	safety-related sensor inputs
Number of inputs	2
Input voltage range "0" signal	0 V DC ... 5 V DC
Input voltage range "1" signal	11 V DC ... 30 V DC
Input current range "0" signal	0 mA ... 2 mA
Inrush current	< 11 mA (typ. with U_S)
Filter time	max. 3 ms (Test pulse width of low test pulses)
	min. 21 ms (Test pulse rate for low test pulse)
Concurrence	∞
Limit frequency	min. 0 Hz
	max. 1 Hz
Max. permissible overall conductor resistance	150 Ω
Protective circuit	Varistor
Current consumption	< 4.5 mA (typ. with U_S)

Digital: Start circuit (S34)

Description of the input	non-safety-related
Number of inputs	1
Input voltage range "0" signal	0 V DC ... 5 V DC
Input voltage range "1" signal	11 V DC ... 30 V DC
Input current range "0" signal	0 mA ... 2 mA
Inrush current	< 8.6 mA (typ. with U_S)
Filter time	max. 1 ms (Test pulse width of low test pulses)
	min. 21 ms (Test pulse rate for low test pulse)
Limit frequency	min. 0 Hz
	max. 1 Hz
Max. permissible overall conductor resistance	150 Ω
Protective circuit	Varistor
Current consumption	< 3.2 mA (typ. with U_S)

Output data

Relay: Enabling current paths (13/14, 23/24/34, 47/48/58)

Output description	2 N/O contacts each in series, safety-related, floating
Number of outputs	3 (undelayed: 13/14, 23/24/34)
	2 (delayed: 47/48/58)
Contact switching type	5 enabling current paths
Contact material	AgCuNi +0.2 µm ... 0.4 µm Au / $AgSnO_2$ +0.2 µm Au
Switching voltage	min. 12 V AC/DC
	max. 250 V AC/DC (Observe the load curve)
Switching power	min. 60 mW
Inrush current	min. 5 mA
	max. 6 A
Switching capacity	4 A (24 V (DC13))
	3 A (230 V (AC 15))
Limiting continuous current	6 A
Sq. Total current	108 A^2 (observe derating)
Switching frequency	0.5 Hz (depending on the set delay time)
Mechanical service life	10x 10^6 cycles
Output fuse	6 A gL/gG
	4 A gL/gG (for low-demand applications)

Signal: M1

Output description	PNP
	non-safety-related
Number of outputs	1
Voltage	approx. 23 V DC (U_S - 1 V)
Current	max. 100 mA
Maximum inrush current	500 mA (Δt = 100 ms at U_s)
Protective circuit	Suppressor diode
Short-circuit protection	Yes

Clock: S11, S21

Output description	PNP
	non-safety-related
Number of outputs	2
Voltage	corresponds to U_S
Current	max. 100 mA
Maximum inrush current	500 mA (Δt = 100 ms at U_s)
Protective circuit	Suppressor diode
Short-circuit protection	Yes

Connection data

Connection technology

pluggable	yes

Conductor connection

Connection method	Push-in connection

Conductor cross-section rigid	0.2 mm² ... 1.5 mm²
Conductor cross-section flexible	0.2 mm² ... 1.5 mm²
Conductor cross-section, flexible, with ferrule, with plastic sleeve	0.25 mm² ... 1.5 mm² (only together with CRIMPFOX 6)
Conductor cross-section, flexible, with ferrule, without plastic sleeve	0.25 mm² ... 1.5 mm² (only together with CRIMPFOX 6)
Conductor cross-section AWG	24 ... 16
Stripping length	8 mm

Signaling

Status display	5 x bi-color LED

Dimensions

Width	22.5 mm
Height	117.5 mm
Depth	114.5 mm

Material specifications

Color (Housing)	yellow (RAL 1018)
Housing material	PA

Characteristics

Safety data

Stop category (EN 60204-1)	0 (Undelayed contacts)
Stop category	1 (delayed contacts)

Safety data: EN ISO 13849

Performance level (PL)	e (4 A DC13; 3 A AC15; 8760 switching cycles/year)

Safety data: IEC 61508 - High demand

Safety Integrity Level (SIL)	3

Safety data: IEC 61508 - Low demand

Safety Integrity Level (SIL)	3

Safety data: EN IEC 62061

Safety Integrity Level (SIL)	3

Environmental and real-life conditions

Ambient conditions

Degree of protection	IP20
Min. degree of protection of inst. location	IP54
Ambient temperature (operation)	-35 °C ... 60 °C (observe derating)
Ambient temperature (storage/transport)	-40 °C ... 85 °C
Maximum altitude	≤ 2000 m (Above sea level)
Max. permissible humidity (storage/transport)	75 % (on average, 85% infrequently, non-condensing)
Max. permissible relative humidity (operation)	75 % (on average, 85% infrequently, non-condensing)

Shock	10g (operation), 15g (transport)
Vibration (operation)	10 Hz ... 150 Hz, 2g

Approvals

CE

Identification	CE-compliant

Mounting

Mounting type	DIN rail mounting
Assembly note	See derating curve
Mounting position	vertical or horizontal

Drawings

Circuit diagram

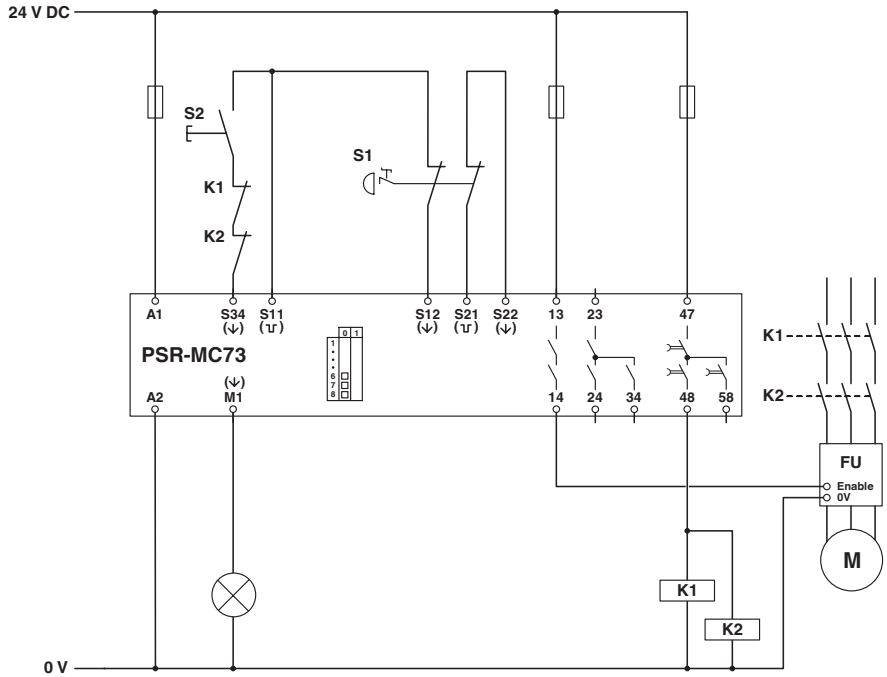

Block diagram

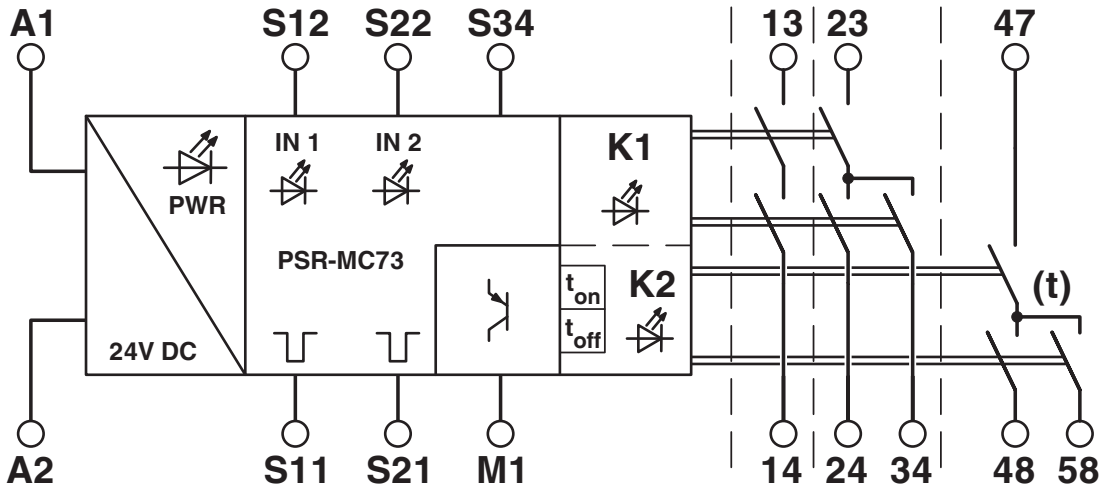

Block diagram

Approvals

To download certificates, visit the product detail page: https://www.phoenixcontact.com/us/products/1015526

cULus Listed
Approval ID: E140324

Functional Safety
Approval ID: 01/205/5486.02/24

Functional Safety
Approval ID: 01/205/5486.03/26

Classifications

ECLASS

ECLASS-13.0	27371819
ECLASS-15.0	27371819
ECLASS-15.0 ASSET	27250101

ETIM

ETIM 10.0	EC001449

UNSPSC

UNSPSC 21.0	39122200

Environmental product compliance

EU RoHS

Fulfills EU RoHS substance requirements	Yes
Exemption	7(a), 7(c)-I

China RoHS

Environment friendly use period (EFUP)	EFUP-50
	An article-related China RoHS declaration table can be found in the download area for the respective article under "Manufacturer declaration". For all articles with EFUP-E, no China RoHS declaration table issued and required.

EU REACH SVHC

REACH candidate substance (CAS No.)	Lead(CAS: 7439-92-1)
	2,2',6,6'-tetrabromo-4,4'-isopropylidenediphenol(CAS: 79-94-7)
SCIP	3efdd2ea-dc63-46a1-9231-1f96d79904e0

EF3.1 Climate Change

CO2e kg	6.896 kg CO2e

Phoenix Contact 2026 © - all rights reserved
https://www.phoenixcontact.com

Phoenix Contact USA
586 Fulling Mill Road
Middletown, PA 17057, United States
(+717) 944-1300
info@phoenixcon.com