PSR-MC31-2SDO-1DO-24DC-SP - Safety relay module

1015503

https://www.phoenixcontact.com/us/products/1015503

Please be informed that the data shown in this PDF document is generated from our online catalog. Please find the complete data in the user documentation. Our general terms of use for downloads are valid.



Safety relay module for safety shut-off mats, switching strips, emergency stop, safety doors, and light grids up to SIL 3, Cat. 4, PL e, 1 or 2-channel operation, automatic or manual start, 2 safe HL outputs, 1 signal output, U_S = 24 V DC, pluggable Push-in terminal block

Your advantages

- Up to Cat. 4/PL e in accordance with EN ISO 13849-1, SIL 3 in accordance with EN IEC 62061
- Low housing width of just 12.5 mm
- Cascade input
- Compatible with numerous signal generators
- 1 or 2-channel control
- 2 safe digital outputs, 1 digital signal output

ELEKTROGERÄTE RÜCKNAHME

Commercial data

Item number	1015503
Packing unit	1 pc
Minimum order quantity	1 pc
Sales key	DN01
Product key	DNA181
GTIN	4055626496467
Weight per piece (including packing)	129.89 g
Weight per piece (excluding packing)	104.382 g
Customs tariff number	85371098
Country of origin	DE

Technical data

Notes

Note on application

Note on application	Only for industrial use

Product properties

Product type	Safety relays
Product family	PSRmini
Application	Emergency stop
	Safety door
	Safety shut-off mats
	Light grid
Control	1 and 2 channel

Insulation characteristics

Protection class	II

Insulation characteristics

Overvoltage category	III
Degree of pollution	2

Times

Typical response time	< 200 ms (automatic start)
	< 175 ms (manual, monitored start)
Typ. starting time with U_s	< 200 ms (with U_s when controlled via A1)
Response time	< 10 ms (Take the extension of the response time into consideration if you switch several devices in sequence.)
Restart time	< 250 ms (Boot time)
Recovery time	250 ms (following demand of the safety function)
	100 ms (Availability time after activating the sensor circuit during manual start)
Start pulse length	min. 250 ms (manual start)

Electrical properties

Maximum power dissipation for nominal condition	3.1 W (U_B = 30 V , I_{L1} = I_{L2} = 2.4 A)
Nominal operating mode	100% operating factor
Rated insulation voltage	50 V AC
Rated surge voltage/insulation	See data sheet, section “Insulation coordination”.

Supply

Designation	A1/A2
Rated control circuit supply voltage U_S	19.2 V DC ... 30 V DC
Rated control circuit supply voltage U_S	24 V DC -20 % / +25 % (provide external protection)
Rated control supply current I_S	typ. 54 mA (No load)

Power consumption at U_S	typ. 1.3 W (No load)
Inrush current	< 5 A (Δt = 200 µs at U_s)
Filter time	1 ms (For the logic. At A1 in the event of voltage dips at U_s)
Protective circuit	Parallel protection against polarity reversal; Suppressor diode (Provide external fuse protection, see safety notes. Fuse type: 5 AT)

Input data

Digital: Sensor circuit (S10, S12, S22)

Description of the input	safety-related sensor inputs
	IEC 61131-2 type 3 (S10, S12) PNP (S22)
Number of inputs	3
Input voltage range "0" signal	0 V DC ... 5 V DC (S10, S12)
	S22 open
Input voltage range "1" signal	11 V DC ... 30 V DC (S10, S12)
	0 V ... 0 V (S22)
Input current range "0" signal	0 mA ... 2 mA (S10, S12)
Inrush current	< 10 mA (typ. with U_S at S10/S12, Δt = 500 µs)
	> -5 mA (typ. with U_S at S22, Δt = 500 µs)
Filter time	max. 1.5 ms (Test pulse width of low test pulses)
	Test pulse rate = 5 x Test pulse width
	Does not apply for S22
	Deactivate the switch-on pulses for safety applications.
Concurrence	∞
Max. permissible overall conductor resistance	150 Ω
Protective circuit	Suppressor diode
Current consumption	4 mA (S10, S12)
	-4 mA (S22)

Digital: Start circuit (S34, S35)

Description of the input	non-safety-related
	NPN
Number of inputs	2
Input voltage range "1" signal	19.2 V DC ... 30 V DC
Inrush current	< 10 mA (typ. with U_S, Δt < 100 ms)
Max. permissible overall conductor resistance	150 Ω
Protective circuit	Suppressor diode
Current consumption	< 7 mA (typ. with U_S at S34)
	< 5 mA (typ. with U_S at S35)

Digital: External release (S36)

Description of the input	safety-related
	IEC 61131-2 type 3
Number of inputs	1
Input voltage range "0" signal	0 V DC ... 5 V DC

Input voltage range "1" signal	11 V DC ... 30 V DC
Input current range "0" signal	0 mA ... 2 mA
Inrush current	< 10 mA (Δt = 500 µs)
Filter time	max. 1.5 ms (Test pulse width of low test pulses)
	Test pulse rate = 5 x Test pulse width
Max. permissible overall conductor resistance	150 Ω
Protective circuit	Suppressor diode
Current consumption	7 mA

Output data

Digital: 14, 24

Output description	Safety-related digital outputs
	PNP, IEC 61131-2 Type 2
Number of outputs	2
Protective circuit	Freewheeling circuit for inductive loads
Output voltage	≥ 23 V DC (U_s - 1 V)
Leakage current	max. 1 mA (in the safe state)
Ohmic load	min. 12 Ω
Max. capacitive load	max. 10 µF (2.4 A load)
	max. 4.7 µF (1 A load)
Max. inductive load	max. 1 H
Limitation of the voltage induced on circuit interruption	max. 50 V
Output current	max. 2.4 A
Inrush current	max. 4.8 A (Δt = 10 ms)
Min. load current	2 mA
Switching frequency	1 Hz (Resistive, inductive, capacitive)
Output voltage when switched off	< 5 V DC (in the safe state)
Test pulses	< 1 ms (Test pulse width of low test pulses)

Signal: M1

Output description	PNP
	non-safety-related
Number of outputs	1
Voltage	approx. 22 V DC (U_s - 2 V)
Current	max. 100 mA
Maximum inrush current	500 mA (Δt = 1 ms at U_s)
Ohmic load	min. 240 Ω
Switching frequency	1 Hz (Resistive, inductive, capacitive)
Protective circuit	Suppressor diode
Short-circuit protection	Yes

Connection data

Connection technology

pluggable	yes

Conductor connection

Connection method	Push-in connection
Conductor cross-section rigid	0.2 mm² ... 1.5 mm²
Conductor cross-section flexible	0.2 mm² ... 1.5 mm²
Conductor cross-section, flexible, with ferrule, with plastic sleeve	0.25 mm² ... 1.5 mm² (only together with CRIMPFOX 6)
Conductor cross-section, flexible, with ferrule, without plastic sleeve	0.25 mm² ... 1.5 mm² (only together with CRIMPFOX 6)
Conductor cross-section AWG	24 ... 16
Stripping length	8 mm

Signaling

Status display	3 x LED (green)
Operating voltage display	1 x LED (green)
Error indication	1 x LED (red)

Dimensions

Width	12.5 mm
Height	116.6 mm
Depth	114.5 mm

Material specifications

Color (Housing)	yellow (RAL 1018)
Housing material	PA

Characteristics

Safety data

Stop category (EN 60204-1)	0

Safety data: EN ISO 13849

Performance level (PL)	e

Safety data: IEC 61508 - High demand

Safety Integrity Level (SIL)	3

Safety data: EN IEC 62061

Safety Integrity Level (SIL)	3

Environmental and real-life conditions

Ambient conditions

Degree of protection	IP20
Min. degree of protection of inst. location	IP54
Ambient temperature (operation)	-40 °C ... 70 °C (observe derating)
Ambient temperature (storage/transport)	-40 °C ... 70 °C
Maximum altitude	≤ 2000 m (Above sea level)
Max. permissible humidity (storage/transport)	75 % (on average, 85% infrequently, non-condensing)

Max. permissible relative humidity (operation)	75 % (on average, 85% infrequently, non-condensing)
Shock	30g
Vibration (operation)	10 Hz ... 150 Hz, 5g

Approvals

CE

Identification	CE-compliant

Mounting

Mounting type	DIN rail mounting
Assembly note	See derating curve
Mounting position	vertical or horizontal

Drawings

Circuit diagram

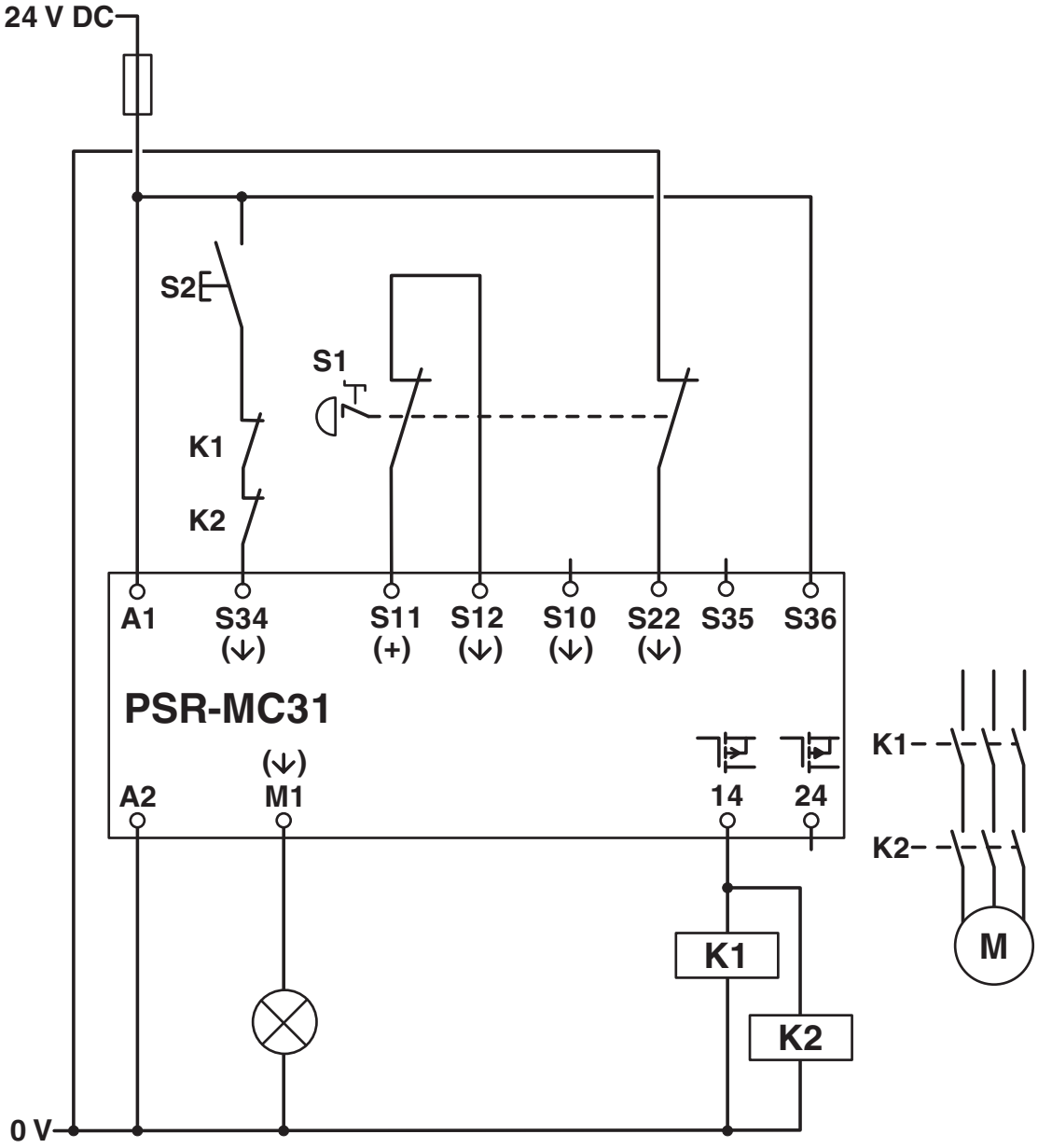

Example application

Block diagram

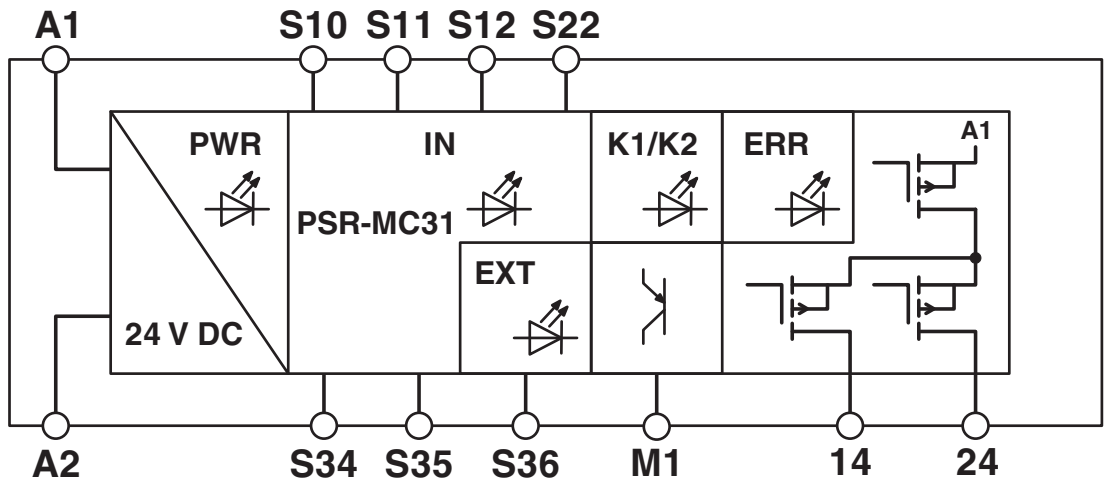

Block diagram

Approvals

To download certificates, visit the product detail page: https://www.phoenixcontact.com/us/products/1015503

Functional Safety
Approval ID: 44 780 15124315

Functional Safety
Approval ID: 44 205 15124315

cULus Listed
Approval ID: E140324

Classifications

ECLASS

ECLASS-13.0	27371819
ECLASS-15.0	27371819
ECLASS-15.0 ASSET	27250101

ETIM

ETIM 10.0	EC001449

UNSPSC

UNSPSC 21.0	39122200

Environmental product compliance

EU RoHS

Fulfills EU RoHS substance requirements	Yes
Exemption	7(a), 7(a)-I, 7(c)-I

China RoHS

Environment friendly use period (EFUP)	EFUP-50
	An article-related China RoHS declaration table can be found in the download area for the respective article under "Manufacturer declaration". For all articles with EFUP-E, no China RoHS declaration table issued and required.

EU REACH SVHC

REACH candidate substance (CAS No.)	Lead(CAS: 7439-92-1)
SCIP	565cea66-a29d-4106-94bc-dd876e029674

EF3.1 Climate Change

CO2e kg	12.396 kg CO2e

Phoenix Contact 2026 © - all rights reserved
https://www.phoenixcontact.com

Phoenix Contact USA
586 Fulling Mill Road
Middletown, PA 17057, United States
(+717) 944-1300
info@phoenixcon.com