VAL-MS-EE-T2-3+1-320 - Type 2 surge arrester

2910575

https://www.phoenixcontact.com/us/products/2910575

Please be informed that the data shown in this PDF document is generated from our online catalog. Please find the complete data in the user documentation. Our general terms of use for downloads are valid.



Surge protective device, 4-channel (in 3+1 circuit), for installation on NS 35/7,5 voltage: 230 V AC

Commercial data

Item number	2910575
Packing unit	1 pc
Minimum order quantity	1 pc
Product key	CLP211
GTIN	4055626462660
Weight per piece (including packing)	411 g
Weight per piece (excluding packing)	394.4 g
Country of origin	CN

Technical data

Product properties

Product type	Surge arrester
IEC test classification	II
	T2
EN type	T2
IEC power supply system	TN-S
	TT
Type	DIN rail module, two-section, divisible
Number of positions	4
Surge protection fault message	optical
Number of ports	One

Insulation characteristics

Overvoltage category	III
Pollution degree	2

Electrical properties

Nominal frequency f_N	50 Hz (60 Hz)

Connection data

Connection method	Screw connection
Screw thread	M5
Tightening torque	3 Nm (1.5 mm² ... 16 mm²)
	4.5 Nm (25 mm² ... 35 mm²)
Stripping length	16 mm
Conductor cross-section flexible	1.5 mm² ... 25 mm²
Conductor cross-section rigid	1.5 mm² ... 35 mm²
Conductor cross-section AWG	15 ... 2
Connection method	Fork-type cable lug
Stripping length	16 mm
Conductor cross-section flexible	1.5 mm² ... 16 mm²

Dimensions

Dimensional drawing	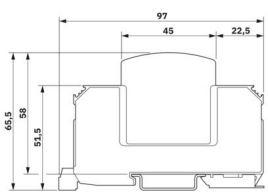
Width	71 mm
Height	90 mm

Depth	64.7 mm
Horizontal pitch	4 HP

Material specifications

Color	traffic gray B (RAL 7043)
Flammability rating according to UL 94	V-0
CTI value of material	600
Insulating material	PA 6.6/PBT
Material group	I
Housing material	PA 6.6
	PBT

Protective circuit

Mode of protection	L-N
	L-PE
	N-PE
Direction of action	3L-N & N-PE
Nominal voltage U_N	240/415 V AC (TN-S)
	240/415 V AC (TT)
Nominal frequency f_N	50 Hz (60 Hz)
Maximum continuous operating voltage U_C (L-N)	335 V AC
Maximum continuous operating voltage U_C (L-PE)	335 V AC
Maximum continuous operating voltage U_C (N-PE)	260 V AC
Rated load current I_L	80 A
Protective conductor current I_{PE}	≤ 5 µA
Standby power consumption P_C	≤ 450 mVA
Nominal discharge current I_n (8/20) µs	20 kA
Maximum discharge current I_{max} (8/20) µs	40 kA
Follow current interrupt rating I_{fi} (N-PE)	100 A
Short-circuit current rating I_{SCCR}	25 kA
Voltage protection level U_p (L-N)	≤ 1.6 kV
Voltage protection level U_p (L-PE)	≤ 1.9 kV
Voltage protection level U_p (N-PE)	≤ 1.5 kV
Residual voltage U_{res} (L-N)	≤ 1.6 kV (at I_n)
	≤ 1.5 kV (at 10 kA)
	≤ 1.3 kV (at 5 kA)
	≤ 1.1 kV (at 3 kA)
Residual voltage U_{res} (L-PE)	≤ 1.9 kV (at I_n)
	≤ 1.5 kV (at 10 kA)
	≤ 1.3 kV (at 5 kA)
	≤ 1.2 kV (at 3 kA)
Residual voltage U_{res} (N-PE)	≤ 0.4 kV (at I_n)
	≤ 0.25 kV (at 10 kA)
	≤ 0.15 kV (at 5 kA)

	≤ 0.1 kV (at 3 kA)
TOV behavior at U_T (L-N)	415 V AC (5 s / withstand mode)
	440 V AC (120 min / safe failure mode)
TOV behavior at U_T (N-PE)	1200 V AC (200 ms / withstand mode)
Response time t_A (L-N)	≤ 25 ns
Response time t_A (L-PE)	≤ 100 ns
Response time t_A (N-PE)	≤ 100 ns
Max. backup fuse with V-type through wiring	80 A (gG)
Max. backup fuse with branch wiring	125 A (gG)

Environmental and real-life conditions

Ambient conditions

Degree of protection	IP20 (only when all terminal points are used)
Ambient temperature (operation)	-40 °C ... 80 °C
Ambient temperature (storage/transport)	-40 °C ... 80 °C
Altitude	≤ 2000 m (amsl)
Permissible humidity (operation)	5 % ... 95 %
Shock (operation)	25g (Half-sine / 11 ms / 3x ±X, ±Y, ±Z)
Vibration (operation)	5g (10 ... 500 Hz / 2.5 h / X, Y, Z)

Standards and regulations

Standards/specifications	IEC 61643-11
Note	2011
Standards/specifications	EN 61643-11
Note	2012

Mounting

Mounting type	DIN rail: 35 mm

Drawings

Dimensional drawing

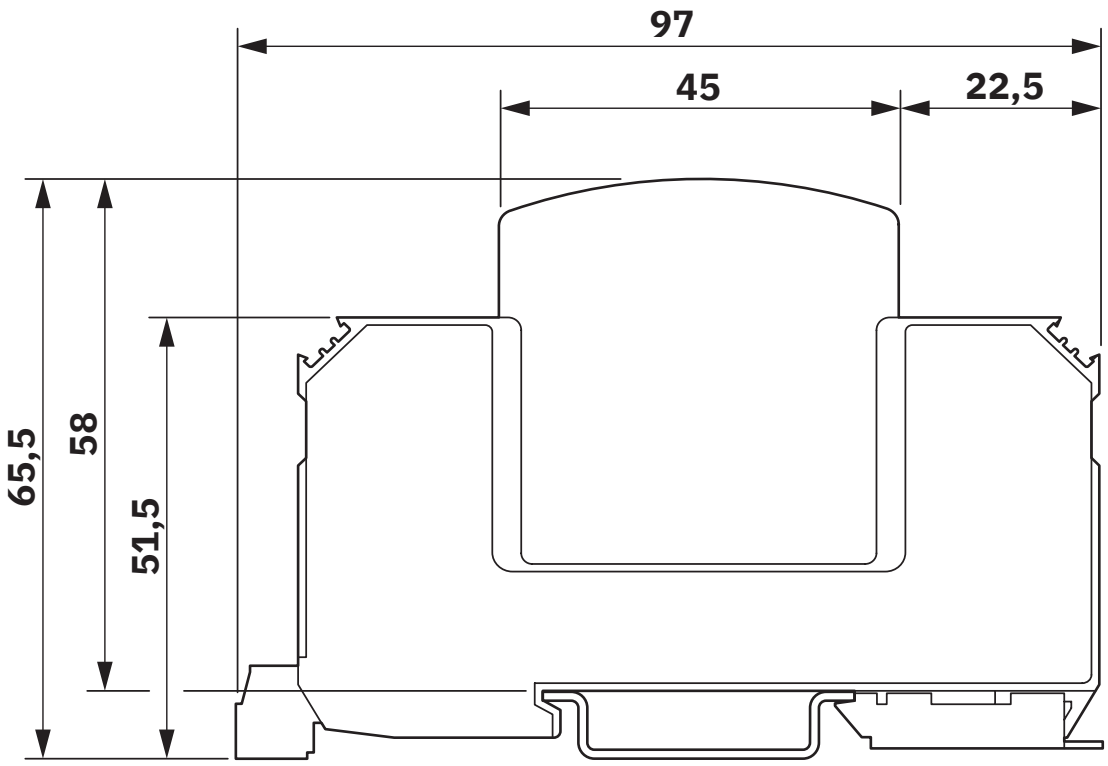

The figure shows the dimensional drawing for a version with remote indicator contact

Circuit diagram

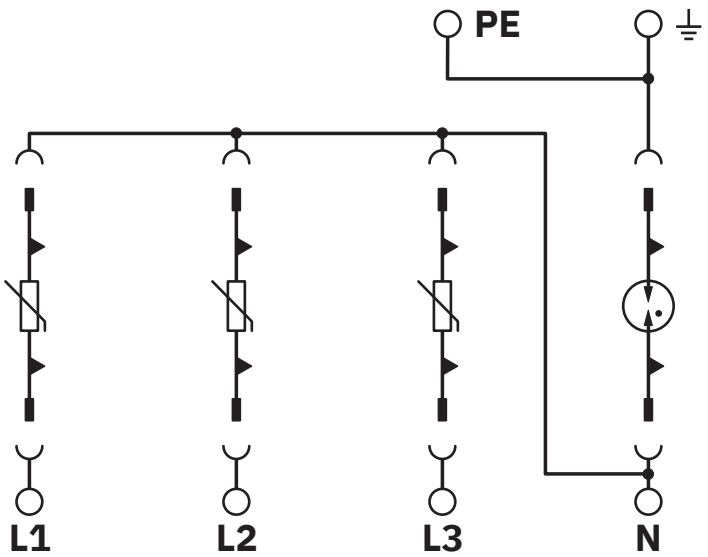

Classifications

ECLASS

ECLASS-13.0	27171202
ECLASS-15.0	27171202

ETIM

ETIM 10.0	EC000941

UNSPSC

UNSPSC 21.0	39121600

Environmental product compliance

EU RoHS

Fulfills EU RoHS substance requirements	Yes, No exemptions

China RoHS

Environment friendly use period (EFUP)	EFUP-E
	No hazardous substances above the limits

EU REACH SVHC

REACH candidate substance (CAS No.)	No substance above 0.1 wt%

EF3.1 Climate Change

CO2e kg	11.406 kg CO2e

Phoenix Contact 2026 © - all rights reserved
https://www.phoenixcontact.com

Phoenix Contact USA
586 Fulling Mill Road
Middletown, PA 17057, United States
(+717) 944-1300
info@phoenixcon.com