# PT 1X2+F-BE - Surge protection base-element

2856126

https://www.phoenixcontact.com/us/products/2856126

Please be informed that the data shown in this PDF document is generated from our online catalog. Please find the complete data in the user documentation. Our general terms of use for downloads are valid.




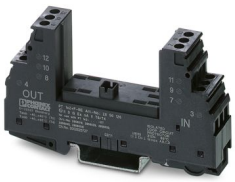

Base element for protective plug PT with protective circuit for a 2-core floating signal circuit. Integrated gas arrester as coarse protection between GND and PE. Mounting on NS 35/7.5 und NS 35/15, housing width: 17.5 mm.

## Your advantages

- Maximum ease of maintenance, thanks to the 2-piece design
- Easy selection for all possible demands in MCR applications with a complete product portfolio
- The signal is not influenced during maintenance work, thanks to the impedance-neutral insertion and removal of protective plugs

ELEKTROGERÄTE RÜCKNAHME

## Commercial data

| | |
|---|---|
| Item number | 2856126 |
| Packing unit | 10 pc |
| Minimum order quantity | 1 pc |
| Sales key | CL21 |
| Product key | CL2111 |
| GTIN | 4017918599270 |
| Weight per piece (including packing) | 55.2 g |
| Weight per piece (excluding packing) | 46.381 g |

| | |
|---|---|
| Customs tariff number | 85366990 |
| Country of origin | DE |

## Technical data

### Notes

| | |
|---|---|
| Notes on operation | In the base elements PT...+F-BE, the connections 9/10 (GND) are linked to the mounting foot via a gas-filled surge arrester. |

### Product properties

| | |
|---|---|
| Product type | Base element |
| Product family | PLUGTRAB PT |
| Type | Base element, DIN rail mounting |
| Number of positions | 2 |
| Surge protection fault message | none |
| Wire pairs per module | 1 |

Insulation characteristics

| | |
|---|---|
| Overvoltage category | III |
| Pollution degree | 2 |

### Electrical properties

| | |
|---|---|
| Nominal voltage $U_N$ | 48 V DC |

### Connection data

| | |
|---|---|
| Connection method | Screw connection |
| Screw thread | M3 |
| Tightening torque | 0.5 Nm |
| Conductor cross-section flexible | 0.2 mm² ... 2.5 mm² |
| Conductor cross-section rigid | 0.2 mm² ... 4 mm² |
| Conductor cross-section AWG | 24 ... 12 |

### Dimensions

| | |
|---|---|
| Dimensional drawing | 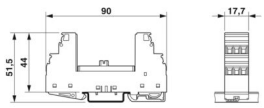  |
| Width | 17.7 mm |
| Height | 90 mm |
| Depth | 51.5 mm (incl. DIN rail 7.5 mm) |
| Horizontal pitch | 1 HP |

### Material specifications

| | |
|---|---|
| Color | black (RAL 9005) |
| | copper color |
| Flammability rating according to UL 94 | V-0 |

| | |
|---|---|
| Housing material | PA 6.6 |

## Mechanical properties

Mechanical data

| | |
|---|---|
| Open side panel | No |

## Protective circuit

| | |
|---|---|
| Direction of action | Signal Ground/Shield-Earth Ground |
| Nominal voltage $U_N$ | 48 V DC |
| Maximum continuous operating voltage $U_C$ | 53 V DC |
| | 37 V AC |
| Rated current | 450 mA (45 °C) |
| Resistance per path | 2.2 Ω ±10 % |
| Surge protection fault message | none |
| Max. required back-up fuse | 500 mA (T) |

## Environmental and real-life conditions

Ambient conditions

| | |
|---|---|
| Degree of protection | IP20 |
| Ambient temperature (operation) | -40 °C ... 85 °C |
| Ambient temperature (storage/transport) | -40 °C ... 85 °C |
| Altitude | ≤ 2000 m (amsl) |

## Approvals

Conformity/Approvals

| | |
|---|---|
| ATEX | Ⓔx II 3 G Ex nA II T6/T4 X |

## Standards and regulations

| | |
|---|---|
| Standards/specifications | IEC 61643-21 |
| Note | 2000 + corrigendum 2001 + A1:2008, modified + A2:2012 |
| Standards/specifications | EN 61643-21 |
| Note | 2001 + A1:2009 + A2:2013 |
| Standards/specifications | GB/T 3836.1 |
| Note | 2021 |
| Standards/specifications | GB/T 3836.3 |
| Note | 2021 |

## Mounting

| | |
|---|---|
| Mounting type | DIN rail: 35 mm |

## Drawings

Dimensional drawing

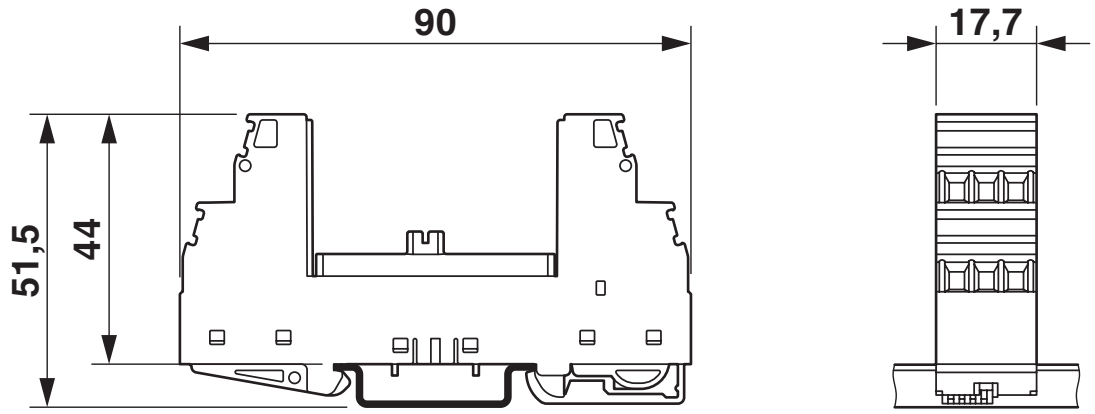


Diagram

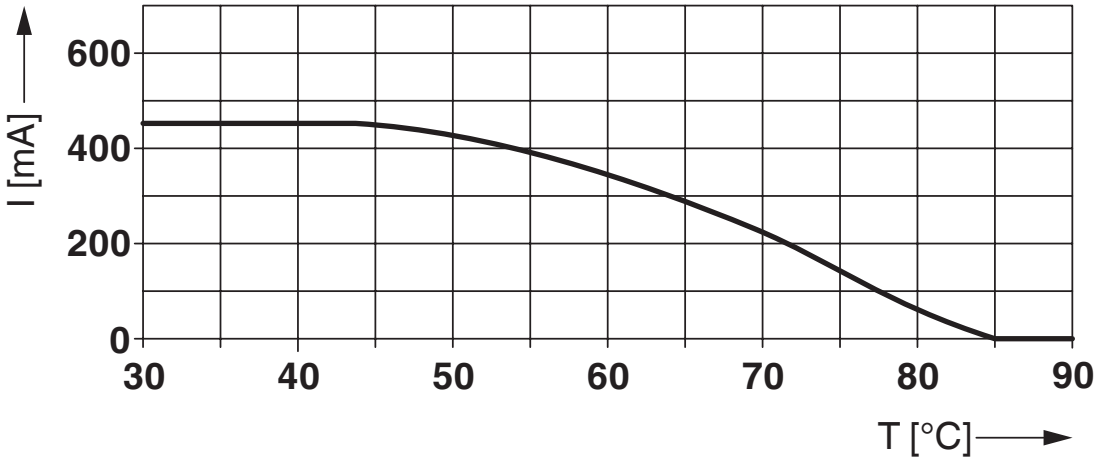

Circuit diagram

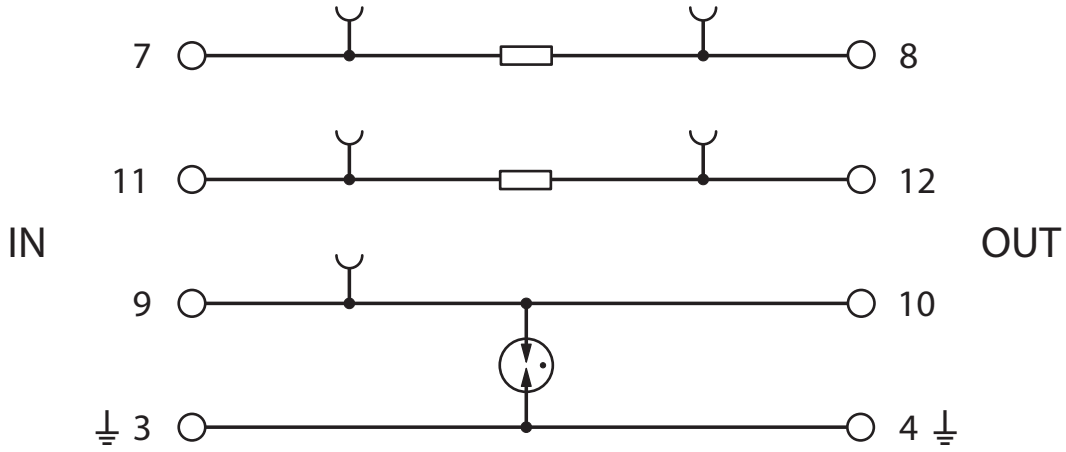

## Approvals

To download certificates, visit the product detail page: https://www.phoenixcontact.com/us/products/2856126

**DNV GL**
Approval ID: TAE00001N6

**UL Listed**
Approval ID: FILE E 138168

**CCC**
Approval ID: 2020322316003150

**cUL Listed**
Approval ID: FILE E 333250

**UL Listed**
Approval ID: FILE E 333250

**NEPSI-EX**
Approval ID: GYJ20.1180X

**ATEX**
Approval ID: DEKRA 22ATEX0044X

**IECEx**
Approval ID: IECEx DEK 22.0031X

## Classifications

### ECLASS

| | |
|---|---|
| ECLASS-13.0 | 27171592 |
| ECLASS-15.0 | 27171592 |

### ETIM

| | |
|---|---|
| ETIM 10.0 | EC002497 |

### UNSPSC

| | |
|---|---|
| UNSPSC 21.0 | 39121600 |

## Environmental product compliance

EU RoHS

| | |
|---|---|
| Fulfills EU RoHS substance requirements | Yes, No exemptions |

China RoHS

| | |
|---|---|
| Environment friendly use period (EFUP) | EFUP-E |
| | No hazardous substances above the limits |

EU REACH SVHC

| | |
|---|---|
| REACH candidate substance (CAS No.) | No substance above 0.1 wt% |

Phoenix Contact 2026 © - all rights reserved
https://www.phoenixcontact.com

Phoenix Contact USA
586 Fulling Mill Road
Middletown, PA 17057, United States
(+717) 944-1300
info@phoenixcon.com