UPS-BAT/PB/24DC/12AH - Battery module

1274119

https://www.phoenixcontact.com/us/products/1274119

Please be informed that the data shown in this PDF document is generated from our online catalog. Please find the complete data in the user documentation. Our general terms of use for downloads are valid.

CRA-READY



Battery module (device with battery), VRLA-AGM, 24 V DC, 12 Ah, automatic detection and communication with QUINT UPS-IQ. The product is being prepared for compliance with the Cyber Resilience Act (CRA).

Product description

For continuous monitoring and intelligent management, there is constant communication with the QUINT UPS. Thanks to automatic detection of the battery module and tool-free switching during operation, quick installation is possible. The battery modules for QUINT UPS with IQ Technology are fully charged before being sent to our warehouse.

Your advantages

- Maximum buffer times
- Lead AGM (Absorbent Glass Mat) technology

ELEKTROGERÄTE RÜCKNAHME

Commercial data

Item number	1274119
Packing unit	1 pc
Minimum order quantity	1 pc
Sales key	CM24

Product key	CMUEV3
GTIN	4063151466510
Weight per piece (including packing)	9,857 g
Weight per piece (excluding packing)	9,400 g
Customs tariff number	85072080
Country of origin	MY

Technical data

Notes

Note on application

Note on application	As things stand now, we are preparing the product so that, as of December 11, 2027, it will comply with the requirements of the EU Cyber Resilience Act (CRA) based on the information currently available regarding the CRA.

General

Note on the battery	This product contains a battery with a limited shelf life that must be charged every few months. The product packaging indicates when the battery must be started up or recharged. The general shelf life can be found in the energy storage devices area under “Latest startup”.

Energy storage

Input

Input voltage	24 V DC (SELV)
Nominal capacity	min. 12 Ah
Charging current	3.6 A
End-of-charge voltage	27.6 V DC (20 °C)

Output

Output voltage	24 V DC
Output current	max. 50 A
Output fuse	2x 25 A
Buffer time	21 min (20 A)
	8 min (40 A)

General

Connection in parallel	yes
	max. 5
Connection in series	no
Battery type	BB Battery BP 12-12FR
	LEOCH LHR 1255W
Battery technology	VRLA-AGM
IQ-Technology	yes
Latest startup date (battery only)	12 Months (-20 °C ... 20 °C)
	9 Months (25 °C)
	6 Months (30 °C)
Service life	6 Years (20 °C)
Size designation	Block
Battery pack	yes
Suitable for fast charging	yes
Temperature sensor	yes

Number of replacement battery kits	UPS-BAT-KIT/PB/2X12V/12AH (1283121)
	UPS-BAT-KIT/PB/2X12V/12AH/L (1859169)

Connection data

Battery

Position	4.x

Connection technology

Position marking	4.1 (+), 4.2 (-)

Conductor connection

Connection method	Screw connection
rigid	0.75 mm² ... 16 mm²
	10 mm² ... 16 mm² (recommended)
flexible	0.75 mm² ... 16 mm²
	10 mm² ... 16 mm² (recommended)
flexible with ferrule without plastic sleeve	10 mm² ... 16 mm² (recommended)
flexible with ferrule with plastic sleeve	0.75 mm² ... 16 mm²
AWG	20 ... 6
	8 ... 6 (recommended)
Stripping length	10 mm (recommended)
	10 mm
Tightening torque	1.2 Nm ... 1.5 Nm
	15 lb_f-in.
Drive form screw head	Slotted L

LIN

Position	4.x

Connection technology

Position marking	4.3 (⎍⎍)

Conductor connection

Connection method	Screw connection
rigid	0.75 mm² ... 16 mm² (LIN)
flexible	0.75 mm² ... 16 mm² (LIN)
flexible with ferrule without plastic sleeve	0.75 mm² ... 16 mm² (LIN)
flexible with ferrule with plastic sleeve	0.75 mm² ... 16 mm² (LIN)
AWG	20 ... 6 (LIN)
Stripping length	10 mm (LIN)
Tightening torque	1.2 Nm ... 1.5 Nm (LIN)
	15 lb_f-in. (LIN)
Drive form screw head	Slotted L

Product properties

Product type	Battery module

Product family	Battery module (device with battery)
Application	for QUINT4 DC-UPS, QUINT4 AC-UPS, QUINT-UPS, and TRIO-UPS-2G
Disposal	Used batteries must not be thrown away with household waste, they should instead be disposed of in accordance with applicable national regulations.
Special properties	The product is being prepared for compliance with the Cyber Resilience Act (CRA)

Insulation characteristics

Protection class	III
Degree of pollution	2

Dimensions

Item dimensions

Width	202 mm
Height	202 mm
Depth	110 mm

Drill hole

Diameter	5 mm

Installation dimensions

Installation distance right/left	0 mm / 0 mm
Installation distance top/bottom	5 mm / 5 mm

Mounting

Mounting type	Panel mounting, optional DIN rail mounting

Material specifications

Housing material	Metal
Type of housing	Galvanized sheet steel, powder-coated

Environmental and real-life conditions

Ambient conditions

Degree of protection	IP20
Ambient temperature (storage/transport)	-20 °C ... 40 °C
Ambient temperature (charge)	0 °C ... 40 °C
Ambient temperature (discharge)	-20 °C ... 50 °C
Max. permissible relative humidity (operation)	≤ 95 %
Shock	15g, 11 ms, in each space direction (in accordance with IEC 60068-2-27)
Vibration (operation)	5 Hz … 100 Hz, 0.7g (in accordance with DNV / IEC 60068-2-6)

Approvals

UL

Identification	UL/C-UL Listed UL 61010-1

UL

Identification	UL/C-UL Listed ANSI/UL 121201 Class I, Division 2, Groups A, B, C, D (Hazardous Location)

Shipbuilding

Identification	DNV

Shipbuilding

Identification	ABS

Shipbuilding

Identification	LR

Shipbuilding

Identification	BV

Ex data

Suited for EX-applications	no

Drawings

Block diagram

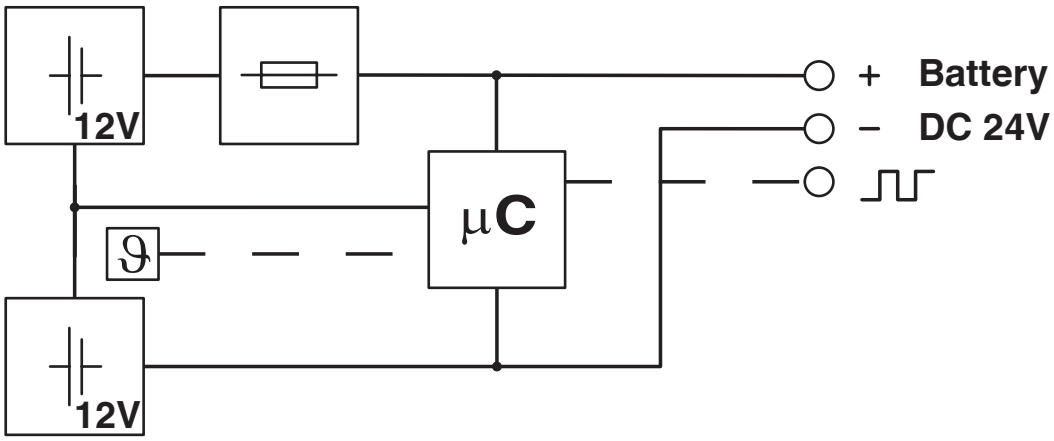

Block diagram

Graphic

Load Current	Buffertime																												
	Minutes															Hours													
	1	2	3	4	5	6	7	8	9	10	20	30	40	45	50	1	2	3	4	5	6	7	8	9	10	12	14	16	18	20	50	100
1 A																														2x		
2 A																														2x		
3 A																												2x	2x	2x		
5 A																							2x	2x	2x	2x	2x	2x				
7 A																				2x	2x	2x	2x	2x	2x							
10 A																			2x	2x	2x	2x	2x									
15 A																	2x	2x	2x													
20 A																	2x	2x														
25 A																	2x															
30 A																2x																
35 A														2x	2x	2x																
40 A													2x	2x	2x	2x																

2x: In this case, two battery modules of the same capacity are required. The data is based on an ambient temperature of +25 °C at the start of use.

1274520 UPS-BAT/PB/24DC/1.2AH

1274119 UPS-BAT/PB/24DC/12AH

1474660 UPS-BAT/PB/24DC/110AH

1274117 UPS-BAT/PB/24DC/4AH

1348516 UPS-BAT/PB/24DC/20AH

1274118 UPS-BAT/PB/24DC/7AH

1354641 UPS-BAT/PB/24DC/40AH

Lead battery buffer times for QUINT DC UPS

Graphic

Load Current	Buffertime																			
	Minutes										Hours									
	1	2	3	5	10	20	30	40	45	50	1	2	3	5	8	10	15	24	40	60
15 W																				
35 W																				
55 W																				
90 W																				
125 W																				
180 W																				
275 W																				
400 W																				

The data is based on an ambient temperature of +25 °C at the start of use.

1274117 UPS-BAT/PB/24DC/4AH
1274119 UPS-BAT/PB/24DC/12AH
1354641 UPS-BAT/PB/24DC/40AH
1274118 UPS-BAT/PB/24DC/7AH
1348516 UPS-BAT/PB/24DC/20AH
1474660 UPS-BAT/PB/24DC/110AH

Lead battery buffer times for QUINT AC UPS 500 VA

Graphic

Load Current	Buffertime																						
	Minutes													Hours									
	1	2	3	4	5	8	10	15	20	25	30	40	50	1	1.5	2	3	4	6	9	10	15	20	24	40
100 W	2x	2x	2x	2x	2x	2x	2x	2x	2x	2x	2x	2x	2x	2x	2x	2x	2x	2x	2x	2x	2x	2x	2x	2x	2x
200 W	2x	2x	2x	2x	2x	2x	2x	2x	2x	2x	2x	2x	2x	2x	2x	2x	2x	2x	2x	2x	2x	2x	2x		
300 W	2x	2x	2x	2x	2x	2x	2x	2x	2x	2x	2x	2x	2x	2x	2x	2x	2x	2x	2x	2x	2x				
400 W	2x	2x	2x	2x	2x	2x	2x	2x	2x	2x	2x	2x	2x	2x	2x	2x	2x	2x	2x	2x	2x				
500 W	2x	2x	2x	2x	2x	2x	2x	2x	2x	2x	2x	2x	2x	2x	2x	2x	2x	2x	2x						
600 W	2x	2x	2x	2x	2x	2x	2x	2x	2x	2x	2x	2x	2x	2x	2x	2x	2x	2x	2x						
700 W	2x	2x	2x	2x	2x	2x	2x	2x	2x	2x	2x	2x	2x	2x	2x	2x	2x	2x							
800 W	2x	2x	2x	2x	2x	2x	2x	2x	2x	2x	2x	2x	2x	2x	2x	2x	2x	2x							
900 W	2x	2x	2x	2x	2x	2x	2x	2x	2x	2x	2x	2x	2x	2x	2x	2x	2x	2x							

2x: There are always two battery modules of the same capacity are required . The data is based on an ambient temperature of +25 °C at the start of use.

1274117 UPS-BAT/PB/24DC/4AH
1274119 UPS-BAT/PB/24DC/12AH
1354641 UPS-BAT/PB/24DC/40AH
1274118 UPS-BAT/PB/24DC/7AH
1348516 UPS-BAT/PB/24DC/20AH
1474660 UPS-BAT/PB/24DC/110AH

Buffer times for QUINT AC UPS 1 kVA

Approvals

To download certificates, visit the product detail page: https://www.phoenixcontact.com/us/products/1274119

ABS
Approval ID: 22-2244289-PDA

EAC
Approval ID: RU*DE*01.B.78948/21

cULus Listed
Approval ID: FILE E 123528

LR
Approval ID: LR22136091TA

BV
Approval ID: 41516/B0 BV

DNV
Approval ID: TAA0000265

IECEE CB Scheme
Approval ID: DK-134807-A1-UL

IECEE CB Scheme
Approval ID: DK-134807-A1-UL

EAC
Approval ID: RU*DE*01.B.78948/21

ABS
Approval ID: 22-2244289-PDA

BV
Approval ID: 41516/B0 BV

LR
Approval ID: LR22136091TA

cULus Listed
Approval ID: FILE E 123528

DNV
Approval ID: TAA0000265

cULus Listed
Approval ID: FILE E 199827

cULus Listed
Approval ID: FILE E 199827

Classifications

ECLASS

ECLASS-13.0	27050403
ECLASS-15.0	27050403

ETIM

ETIM 10.0	EC003893

UNSPSC

UNSPSC 21.0	26111700

Environmental product compliance

EU RoHS

Fulfills EU RoHS substance requirements	Yes
Exemption	7(c)-I

China RoHS

Environment friendly use period (EFUP)	EFUP-8
	An article-related China RoHS declaration table can be found in the download area for the respective article under "Manufacturer declaration". For all articles with EFUP-E, no China RoHS declaration table issued and required.

EU REACH SVHC

REACH candidate substance (CAS No.)	Diboron trioxide(CAS: 1303-86-2)
	Lead monoxide (lead oxide)(CAS: 1317-36-8)
	Lead(CAS: 7439-92-1)
SCIP	e5ec962e-167d-425b-85e2-113ddb104ff8

Phoenix Contact 2026 © - all rights reserved
https://www.phoenixcontact.com

Phoenix Contact USA
586 Fulling Mill Road
Middletown, PA 17057, United States
(+717) 944-1300
info@phoenixcon.com