MACX MCR-VDC-PT - Voltage measuring transducers

2906243

https://www.phoenixcontact.com/us/products/2906243

Please be informed that the data shown in this PDF document is generated from our online catalog. Please find the complete data in the user documentation. Our general terms of use for downloads are valid.



MACX MCR voltage transducers for DC voltages of 0... (+/-) 20 V DC to 0.. .(+/-) 660 V DC, output signal (+/-) 10 V/ (+/-)20 mA

Product description

MACX MCR voltage measuring transducers capture DC or AC voltages and convert them into standard analog signals. The MACX MCR-VDC voltage measuring transducer measures DC voltages within the range of 0 V DC to ±660 V DC. Eight finely graded voltage measuring ranges provide optimum measuring accuracy. The 3-way electrical isolation ensures high operational safety.

Your advantages

- Adjustable voltage ranges
- Bidirectional output signals
- 3-way isolation
- ZERO/SPAN adjustment ±20 %
- Tool-free parameterization of measured values
- Teach-in configuration of the measured value range

Commercial data

Item number	2906243
Packing unit	1 pc
Minimum order quantity	1 pc
Sales key	C445
Product key	CMMB21
GTIN	4055626050935
Weight per piece (including packing)	153 g
Weight per piece (excluding packing)	206.8 g
Customs tariff number	85437090
Country of origin	DE

Technical data

Product properties

Product type	Voltage transducer

Electrical properties

Alignment span	± 20 %
Alignment zero	± 20 %
Maximum power dissipation for nominal condition	1.2 W
Protective circuit	Surge protection; 33 V suppressor diode
Step response (10-90%)	< 16 ms
Maximum temperature coefficient	< 0.015 %/K
Maximum transmission error	< 1 % (of measuring range end value)

Electrical isolation

Pollution degree	2

Electrical isolation Measuring circuit to supply circuit and output IEC 61010-2-030

Standards/regulations	IEC 61010-2-030
Test voltage	5.3 kV AC (50 Hz, 60 s)
Measuring category	II (1000 V)
	III (600 V)
	IV (300 V)
Insulation	Reinforced insulation

Electrical isolation Supply circuit to output circuit IEC 61010-1

Standards/regulations	IEC 61010-1
Test voltage	2.2 kV AC (50 Hz, 60 s)
Overvoltage category	III (300 V)
	IV (150 V)
Insulation	Basic insulation

Supply

Nominal supply voltage	24 V DC (-20 % ... +25 %)
Supply voltage range	19.2 V DC ... 30 V DC
Max. current consumption	< 60 mA

Input data

Measurement

Configurable/programmable	Yes
Input voltage range	-550 V DC ... 550 V DC
Maximum input voltage	± 660 V DC
Input resistance of voltage input	5500 kΩ
Impulse form	DC voltage

Measurement

Input voltage range	-370 V DC ... 370 V DC
Input resistance of voltage input	3700 kΩ

Measurement

Input voltage range	-250 V DC ... 250 V DC
Input resistance of voltage input	2500 kΩ

Measurement

Input voltage range	-170 V DC ... 170 V DC
Input resistance of voltage input	1700 kΩ

Measurement

Input voltage range	-120 V DC ... 120 V DC
Input resistance of voltage input	1200 kΩ

Measurement

Input voltage range	-80 V DC ... 80 V DC
Input resistance of voltage input	800 kΩ

Measurement

Input voltage range	-54 V DC ... 54 V DC
Input resistance of voltage input	800 kΩ

Measurement

Input voltage range	-36 V DC ... 36 V DC
Input resistance of voltage input	800 kΩ

Measurement

Input voltage range	-24 V DC ... 24 V DC
Input resistance of voltage input	240 kΩ

Output data

Signal: Voltage

Voltage output signal	-10 V ... 10 V
	2 V ... 10 V
Max. voltage output signal	≤ 11 V
Load/output load voltage output	> 10 kΩ
Ripple	50 mV

Signal: Current

Current output signal	-20 mA ... 20 mA
	4 mA ... 20 mA
Max. current output signal	≤ 22 mA
Load/output load current output	< 500 Ω
Max. capacitive load	< 1000 pF
Max. inductive load	< 1 mH

Connection data

Connection method	Push-in connection
Stripping length	8 mm
Conductor cross-section rigid	0.2 mm² ... 1.5 mm²
Conductor cross-section flexible	0.2 mm² ... 1.5 mm²
Conductor cross-section AWG	24 ... 16

Dimensions

Width	22.5 mm
Height	118 mm
Depth	114 mm

Material specifications

Color	gray (RAL 7042)

Environmental and real-life conditions

Ambient conditions

Degree of protection	IP20
Ambient temperature (operation)	-25 °C ... 60 °C
Ambient temperature (storage/transport)	-40 °C ... 85 °C (non-condensing)
Altitude	≤ 2000 m
Permissible humidity (operation)	10 % ... 95 % (non-condensing)

Approvals

CE

Certificate	CE-compliant

UL, USA/Canada

Identification	UL 61010 Listed

EMC data

Electromagnetic compatibility	Conformance with EMC directive
Low Voltage Directive	Conformance with Low Voltage Directive
Noise immunity	EN 61000-6-2
Note	When being exposed to interference, there may be minimal deviations.

Noise emission

Standards/regulations	EN 61000-6-4

Mounting

Mounting type	DIN rail mounting
Assembly note	can be aligned with spacing = 10 mm
Mounting position	any

Drawings

Block diagram

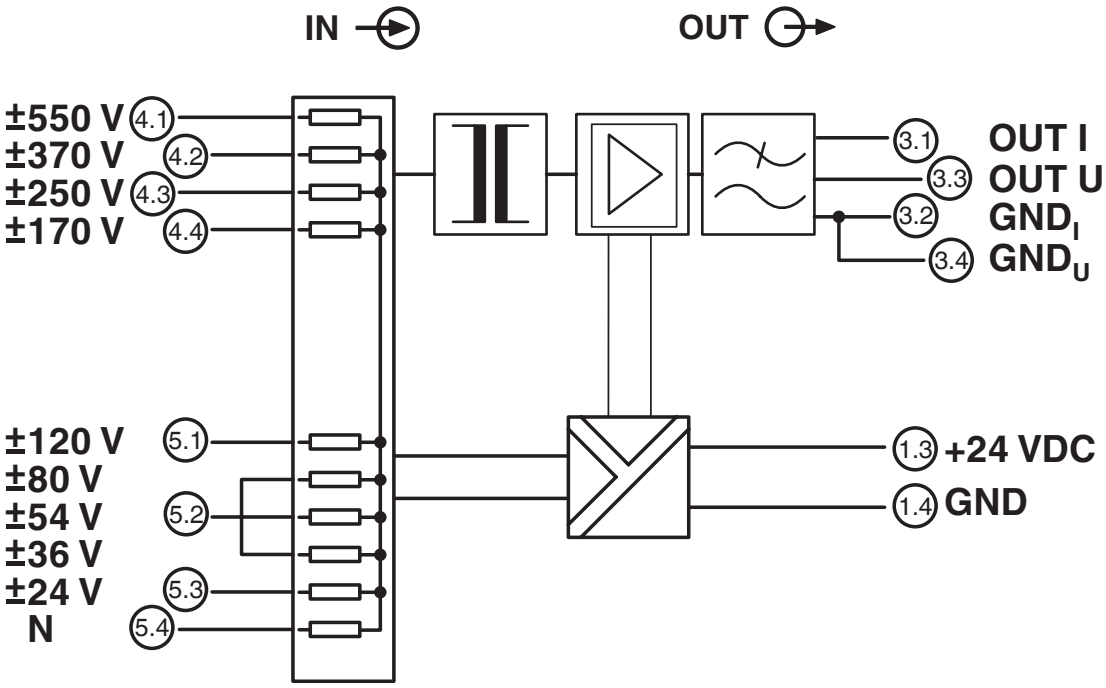

Approvals

To download certificates, visit the product detail page: https://www.phoenixcontact.com/us/products/2906243

UL Listed
Approval ID: E330267

cUL Listed
Approval ID: FILE E 330267

Classifications

ECLASS

ECLASS-13.0	27210125
ECLASS-15.0	27210125

ETIM

ETIM 10.0	EC002477

UNSPSC

UNSPSC 21.0	39121000

Environmental product compliance

EU RoHS

Fulfills EU RoHS substance requirements	Yes
Exemption	7(a), 7(c)-I

China RoHS

Environment friendly use period (EFUP)	EFUP-50
	An article-related China RoHS declaration table can be found in the download area for the respective article under "Manufacturer declaration". For all articles with EFUP-E, no China RoHS declaration table issued and required.

EU REACH SVHC

REACH candidate substance (CAS No.)	Lead(CAS: 7439-92-1)
	2,2',6,6'-tetrabromo-4,4'-isopropylidenediphenol(CAS: 79-94-7)
SCIP	34c3d415-8ee5-47a9-8ac7-1969ebee4ef5

Phoenix Contact 2026 © - all rights reserved
https://www.phoenixcontact.com

Phoenix Contact USA
586 Fulling Mill Road
Middletown, PA 17057, United States
(+717) 944-1300
info@phoenixcon.com