MACX MCR-EX-SL-RPSSI-2I - Repeater power supply

2865366

https://www.phoenixcontact.com/us/products/2865366

Please be informed that the data shown in this PDF document is generated from our online catalog. Please find the complete data in the user documentation. Our general terms of use for downloads are valid.



Ex i-Measuring transducer repeater power supply and input signal conditioner transmits supplied or active 0 mA/4 mA ... 20 mA electrically isolated signals from the Ex area to two loads in the safe area. number of channels: 1, HART transparency, Standard configuration, 3-way isolation, Safety Integrity Level (SIL, IEC 61508): 2, Performance Level (ISO 13849): d / KAT 2, Systematic Capability: 3, Screw connection

Your advantages

- 0/4 mA ... 20 mA input, intrinsically safe, [Ex ia], powered and not powered
- Measuring transducer supply voltage > 16 V
- Two electrically isolated 0/4 mA ... 20 mA (active) outputs
- Bidirectional HART transmission (both outputs)
- Error indication according to NAMUR NE 43
- SIL 2 according to IEC/EN 61508
- Safe electrical isolation between input, outputs, and supply
- Power supply possible via DIN rail connector
- Installation in zone 2 permitted
- Plug-in connection terminal blocks, screw connection technology, with integrated sockets for HART communicators
- Housing width: 12.5 mm
- Minimal power dissipation
- High transmission accuracy

Commercial data

Item number	2865366
Packing unit	1 pc
Minimum order quantity	1 pc
Sales key	C430
Product key	DK1211
GTIN	4046356160384
Weight per piece (including packing)	116.3 g
Weight per piece (excluding packing)	116 g
Customs tariff number	85437090
Country of origin	DE

Technical data

Product properties

Product type	Repeater power supply
Product family	MACX Analog
No. of channels	1

Electrical properties

Electrical isolation	3-way isolation
Electrical isolation between input and output	yes
Signal transmission behavior	In = Out
Step response (10-90%)	1.3 ms (for jump 4 mA ... 20 mA, typical)
Maximum temperature coefficient	< 0.01 %/K
Maximum transmission error	< 0.1 % (of final value 20 mA)
Transmission error, typical	< 0.05 % (of final value 20 mA)

Electrical isolation

Overvoltage category	II
Pollution degree	2

Electrical isolation Input/output/power supply IEC/EN 61010-1

Standards/regulations	IEC/EN 61010-1
Rated insulation voltage	300 V_{rms}
Test voltage	2.5 kV AC (50 Hz, 60 s)
Insulation	Safe isolation

Electrical isolation Input/output IEC/EN 60079-11

Standards/regulations	IEC/EN 60079-11
Rated insulation voltage	265 V_{rms}

Electrical isolation Input/power supply IEC/EN 60079-11

Standards/regulations	IEC/EN 60079-11
Rated insulation voltage	265 V_{rms}

Electrical isolation Output 1/output 2

Test voltage	1.5 kV AC (50 Hz, 60 s)

Supply

Designation	Repeater power supply operation
Nominal supply voltage	24 V DC -20 % ... +25 %
Supply voltage range	19.2 V DC ... 30 V DC
Max. current consumption	< 75 mA (24 V DC / 20 mA)
Power dissipation	< 1.45 W (24 V DC / 20 mA)
Power consumption	≤ 1.8 W

Supply

Designation	Signal conditioner operation
Nominal supply voltage	24 V DC -20 % ... +25 %
Supply voltage range	19.2 V DC ... 30 V DC
Max. current consumption	< 46 mA (24 V DC / 20 mA)
Power dissipation	< 1.2 W (24 V DC / 20 mA)

Input data

Signal: Repeater power supply operation

Description of the input	Active current input
Number of inputs	1
Input signal	Current
Current input signal	4 mA ... 20 mA
Transmitter supply voltage	> 16 V (20 mA)
	> 15.1 V (23 mA)
Polarization and surge protection	Yes
Underload/overload signal range	0 mA ... 24 mA (Extended transmission range for diagnostics)

Signal: Signal conditioner operation

Description of the input	Passive current input
Current input signal	0 mA ... 20 mA
	4 mA ... 20 mA
Voltage drop	< 3.9 V (in input isolating amplifier operation)
Underload/overload signal range	0 mA ... 24 mA (Extended transmission range for diagnostics)

Output data

Signal: Repeater power supply operation

Output description	Current output (active)
Number of outputs	2
Current output signal	4 mA ... 20 mA (Output 1 and output 2 active)
Load/output load current output	< 450 Ω (20 mA)
	< 380 Ω (23 mA)
Output ripple	< 20 mV_{rms}
Output behavior in the event of an error	0 mA (Cable break in the input)
	≥ 23 mA (Cable short-circuit in the input)
Underload/overload signal range	0 mA ... 24 mA (Extended transmission range for diagnostics)

Signal: Signal conditioner operation

Output description	Current output (active)
Current output signal	0 mA ... 20 mA (active)
	4 mA ... 20 mA (active)
Load/output load current output	< 450 Ω (20 mA)
	< 380 Ω (23 mA)
Output ripple	< 20 mV_{rms}
Output behavior in the event of an error	0 mA (Cable break in the input)

	0 mA (Cable short-circuit in the input)
Underload/overload signal range	0 mA ... 24 mA (Extended transmission range for diagnostics)

Connection data

Connection method	Screw connection
Stripping length	7 mm
Screw thread	M3
Conductor cross-section rigid	0.2 mm² ... 2.5 mm²
Conductor cross-section flexible	0.2 mm² ... 2.5 mm²
Conductor cross-section AWG	24 ... 14
Tightening torque	0.5 Nm ... 0.6 Nm

Test socket

Max. diameter	2.3 mm

Ex data

Ex installation (EPL)	Gc
	Div. 2
Ex i circuits (EPL)	[Ga]
	[Da]
	[Ma]
	[Div. 1]

Safety data: Repeater power supply operation

Max. output voltage U_o	25.2 V
Max. output current I_o	93 mA
Max. output power P_o	587 mW
Safety-related maximum voltage U_m	253 V AC
	125 V DC
I (simple circuit): Max. external inductivity L_o / Max. external capacitance C_o	40 mH / 4.8 µF
IIA (simple circuit): Max. external inductivity L_o / Max. external capacitance C_o	26 mH / 2.9 µF
IIB (simple circuit): Max. external inductivity L_o / Max. external capacitance C_o	14 mH / 820 nF
IIC (simple circuit): Max. external inductivity L_o / Max. external capacitance C_o	3 mH / 107 nF
IIA (mixed circuit): Max. external inductivity L_o / Max. external capacitance C_o	26 mH / 470 nF, 20 mH / 570 nF, 1 mH / 630 nF, 0.5 mH / 720 nF, 0.1 mH / 1.1 µF, 0.005 mH / 2.9 µF
IIB/IIIC (mixed circuit): Max. external inductivity L_o / Max. external capacitance C_o	16 mH / 370 nF, 1 mH / 430 nF, 500 µH / 510 nF, 200 µH / 660 nF, 100 µH / 820 nF
IIC (mixed circuit): Max. external inductivity L_o / Max. external capacitance C_o	2.2 mH / 47 nF, 2 mH / 49 nF, 1 mH / 63 nF, 500 µH / 80 nF, 200 µH / 107 nF
I (mixed circuit): Max. external inductivity L_o / Max. external capacitance C_o	37 mH / 0.54 µF, 0.2 mH / 1.1 µF, 10 µH / 2.8 µF, 0.001 mH / 4. 15 µF

Safety data: Signal conditioner operation

Input voltage U_i	≤ 30 V

Input current I_i	≤ 150 mA
Max. internal inductance L_i	negligible
Max. internal capacitance C_i	negligible
Safety-related maximum voltage U_m	253 V AC
	125 V DC

Interfaces

Data communication (bypass)

HART function	HART transparency
Protocols supported	HART

Signaling

Status display	Green LED (supply voltage)

Dimensions

Dimensional drawing	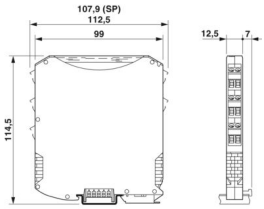
Width	12.5 mm
Height	112.5 mm
Depth	113.7 mm
Depth NS 35/7,5	114.5 mm (Snapped onto DIN rail NS 35/7,5 in accordance with EN 60715)

Material specifications

Color	gray (RAL 7042)
Flammability rating according to UL 94 (Housing)	V0 (Housing)
Housing material	PA 6.6-FR

Environmental and real-life conditions

Ambient conditions

Degree of protection	IP20 (not assessed by UL)
Ambient temperature (operation)	-40 °C ... 60 °C (Any mounting position)
	-40 °C ... 70 °C (Derating)
Ambient temperature (storage/transport)	-40 °C ... 80 °C
Permissible humidity (operation)	10 % ... 95 % (non-condensing)

Altitude range (≤ 2000 m)

Altitude	≤ 2000 m (The technical data refers to altitudes ≤2000 m above mean sea level. For altitudes >2000 m above mean sea level, refer to the data sheet.)

Ambient temperature (operation)	-40 °C ... 60 °C
	-40 °C ... 70 °C (Derating)
Rated insulation voltage	375 V_{PP} (Power supply, input / output)

Altitude range (≤ 3000 m)

Height range	> 2000 m ... 3000 m
Ambient temperature (operation)	-40 °C ... 54 °C
	-40 °C ... 63 °C (Derating)
Rated insulation voltage	190 V AC (Power supply, input / output)
	110 V DC (Power supply, input / output)

Altitude range (≤ 4000 m)

Height range	> 3000 m ... 4000 m
Ambient temperature (operation)	-40 °C ... 48 °C
	-40 °C ... 56 °C (Derating)
Rated insulation voltage	60 V AC/DC (Power supply, input / output)

Altitude range (≤ 5000 m)

Height range	> 4000 m ... 5000 m
Ambient temperature (operation)	-40 °C ... 42 °C
	-40 °C ... 49 °C (Derating)
Rated insulation voltage	60 V AC/DC (Power supply, input / output)

Approvals

CE

Certificate	CE-compliant
Note	and EN 61326

ATEX

Identification	Ⓔx II (1) G [Ex ia Ga] IIC
	Ⓔx II (1) D [Ex ia Da] IIIC
	Ⓔx II 3(1) G Ex ec [ia Ga] IIC T4 Gc
	Ⓔx I (M1) [Ex ia Ma] I
Certificate	BVS 10 ATEX E 143 X

IECEx

Identification	[Ex ia Ga] IIC
	[Ex ia Da] IIIC
	Ex ec [ia Ga] IIC T4 Gc
	[Ex ia Ma] I
Certificate	IECEx BVS 10.0097X

CCC / China-Ex

Identification	[Ex ia Ga] IIC
	[Ex ia Da] IIIC
	Ex ec [ia Ga] IIC T4 Gc

Certificate	2022122316115971

UL, USA/Canada

Identification	IS for Class I,II,III, Division 1 and Zone 0
	Installation in Class I, Division 2 and Zone 2
Certificate	C.D.-No 83104549

Shipbuilding approval

Certificate	DNV GL TAA000020C

Safety Integrity Level (SIL, IEC 61508)

Identification	2
Certificate	IN-AT-AS-MRL-23-00432A

Systematic Capability

Identification	3

Performance Level (ISO 13849)

Identification	d / KAT 2

INMETRO

Identification	[Ex ia Ga] IIC
	[Ex ia Da] IIIC
	Ex ec [ia Ga] IIC T4 Gc
	[Ex ia Ma] I
Certificate	DNV 18.0139 X

Shipbuilding data

Temperature	B
Humidity	B
Vibration	A
EMC	A
Enclosure	Required protection according to the Rules shall be provided upon installation on board

EMC data

Electromagnetic compatibility	Conformance with EMC directive
Noise immunity	EN 61000-6-2
Note	When being exposed to interference, there may be minimal deviations.

Noise emission

Standards/regulations	EN 61000-6-4

Standards and regulations

Electrical isolation	3-way isolation

GB Standard

	GB/T 3836.1

Standards/regulations	GB/T 3836.3
	GB/T 3836.4

Mounting

Mounting type	DIN rail mounting

Drawings

Dimensional drawing

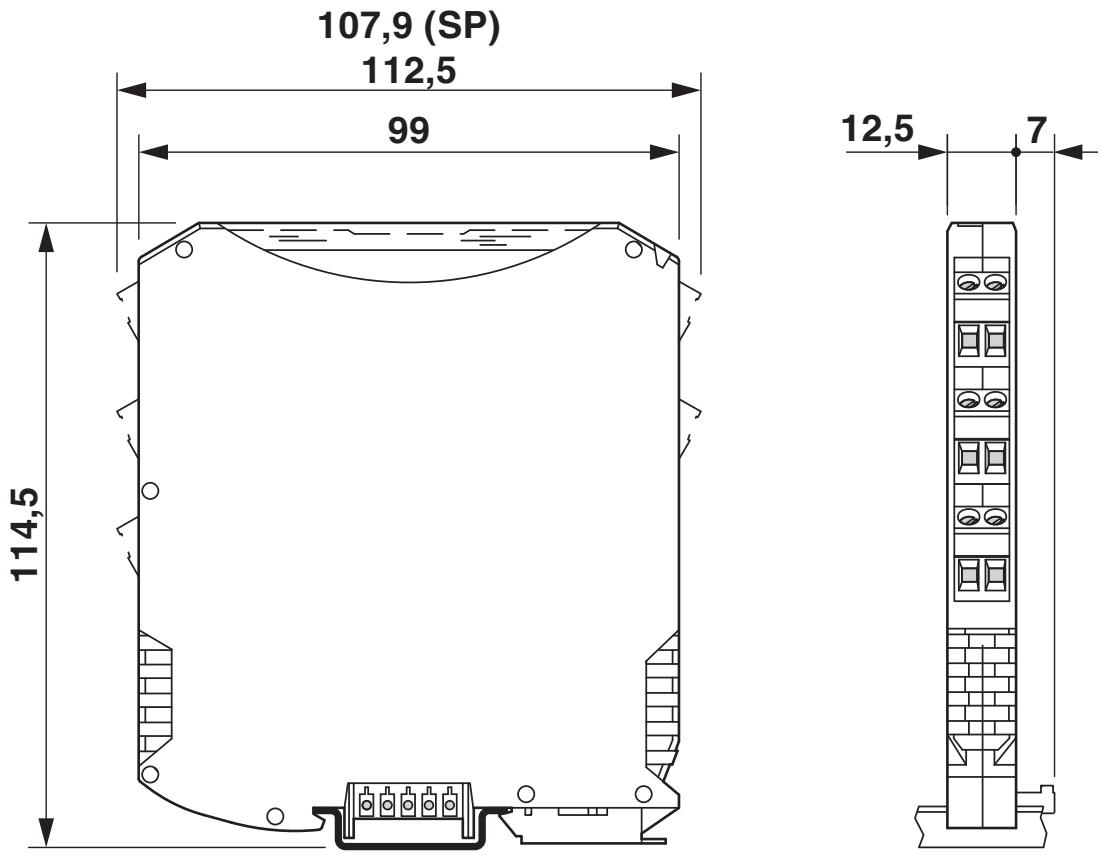

Diagram

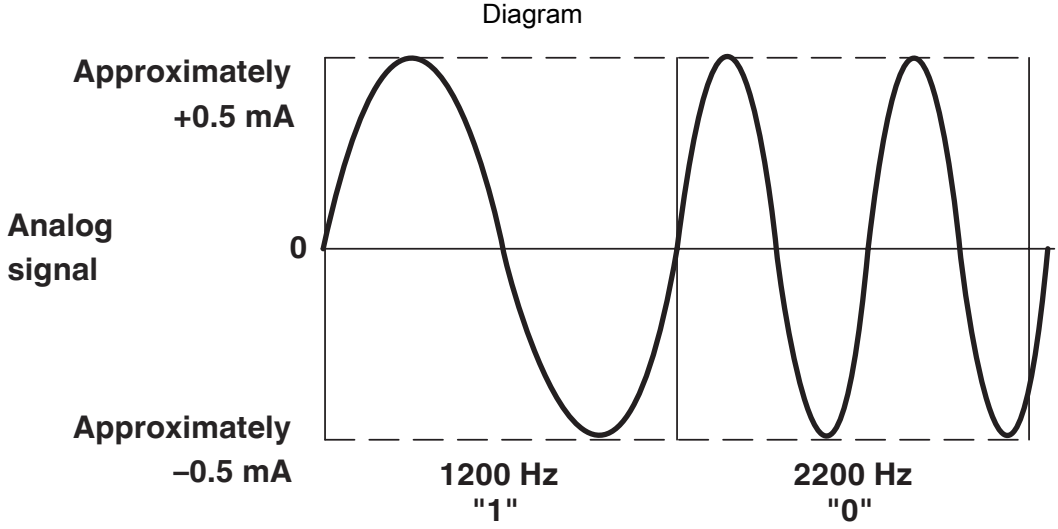

Signal transmission analog and digital at the same time

Block diagram

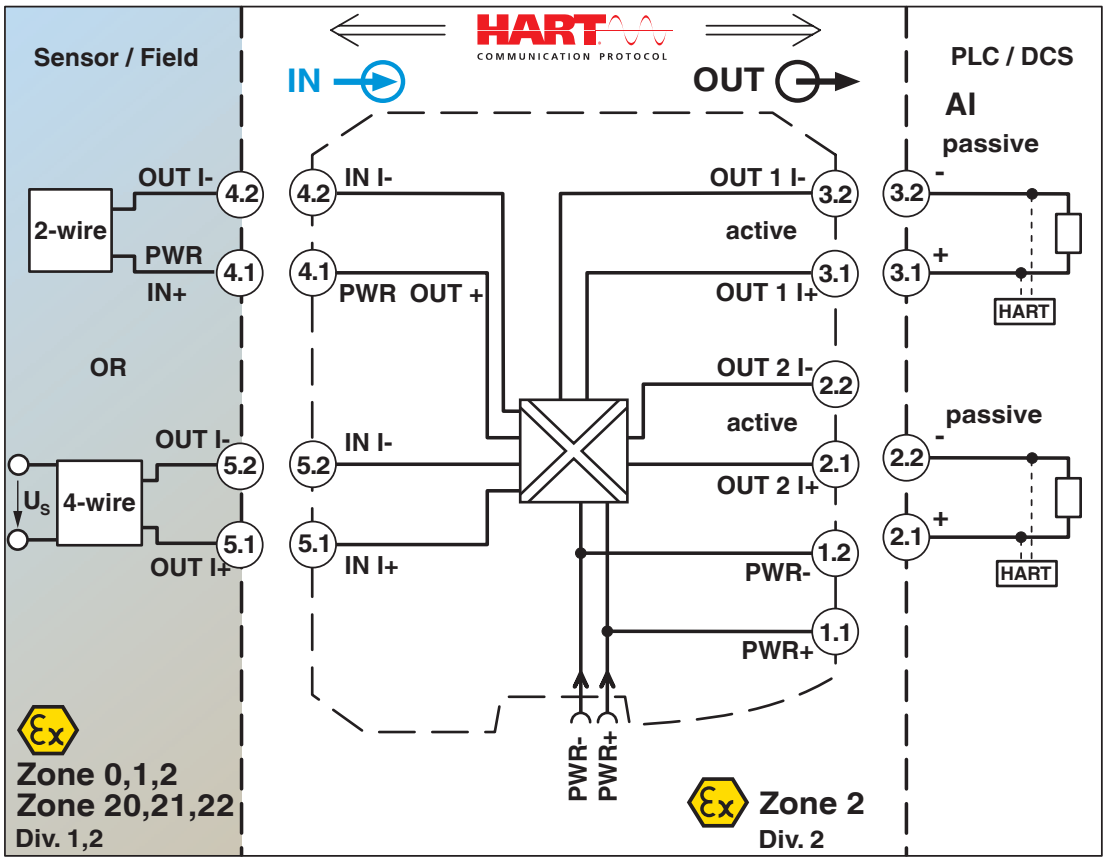

Approvals

To download certificates, visit the product detail page: https://www.phoenixcontact.com/us/products/2865366

UL Listed
Approval ID: E330267

cUL Listed
Approval ID: E330267

Functional Safety
Approval ID: BVS PB 13-10-04

TUEV Austria FS
Approval ID: INATAS-MRL-23-00432A

ECAS
Approval ID: 163685 E25 08 169500

cULus Listed
Approval ID: E330267

IECEx
Approval ID: IECEx BVS 10.0097X

CCC
Approval ID: 2022122316115971

cUL Listed
Approval ID: E199827

UL Listed
Approval ID: E199827

ATEX
Approval ID: BVS 10 ATEX E143 X

ATEX
Approval ID: BVS 10 ATEX E143 X

IECEx
Approval ID: IECEx BVS 10.0097X

INMETRO
Approval ID: DNV 18.0139 X

Classifications

ECLASS

ECLASS-13.0	27210120
ECLASS-14.0 ASSET	27250101
ECLASS-15.0	27210120
ECLASS-15.0 ASSET	27250101

ETIM

ETIM 10.0	EC002653

UNSPSC

UNSPSC 21.0	39121000

Environmental product compliance

EU RoHS

Fulfills EU RoHS substance requirements	Yes
Exemption	6(c), 7(a), 7(a)-I, 7(c)-I

China RoHS

Environment friendly use period (EFUP)	EFUP-50
	An article-related China RoHS declaration table can be found in the download area for the respective article under "Manufacturer declaration". For all articles with EFUP-E, no China RoHS declaration table issued and required.

EU REACH SVHC

REACH candidate substance (CAS No.)	Lead(CAS: 7439-92-1)
SCIP	7763beb8-0e3e-4035-ba01-67afccd2bddd

Phoenix Contact 2026 © - all rights reserved
https://www.phoenixcontact.com

Phoenix Contact USA
586 Fulling Mill Road
Middletown, PA 17057, United States
(+717) 944-1300
info@phoenixcon.com