MINI MCR-SL-I-U-0 - Input signal conditioner

2813541

https://www.phoenixcontact.com/us/products/2813541

Please be informed that the data shown in this PDF document is generated from our online catalog. Please find the complete data in the user documentation. Our general terms of use for downloads are valid.



MCR 3-way isolating amplifier, for electrical isolation of analog signals, with screw connection, input signal: 0 mA ... 20 mA, output signal: 0 V ... 10 V

Product description

The 6.2 mm wide standard signal 3-way isolating amplifier MINI MCR-SL-I-U-... is used for electrical isolation, conversion, amplification and filtering of standard signals.
On the input side, 0...20 V mA or 4...20 mA are measured and made available at the module output as a galvanically isolated 0...10 V signal.
Power (19.2 V DC to 30 V DC) can be supplied through connection terminal blocks on the modules or in conjunction with the DIN rail connector.

Your advantages

- Power supply possible via the foot element (TBUS)
- Low power consumption
- Entry-level alternative to configurable signal conditioners
- Highly-compact isolating amplifier for electrical isolation, conversion, amplification, and filtering of standard analog signals
- 3-way isolation
- Fixed signal combinations

Commercial data

Item number	2813541
Packing unit	1 pc
Minimum order quantity	1 pc
Sales key	C403
Product key	DK1131
GTIN	4046356100601
Weight per piece (including packing)	61 g
Weight per piece (excluding packing)	52 g
Customs tariff number	85437090
Country of origin	DE

Technical data

Notes

Utilization restriction

EMC note	EMC: class A product, see manufacturer's declaration in the download area

Product properties

Product type	Input signal conditioner
Product family	MINI Analog
No. of channels	1

Electrical properties

Electrical isolation	3-way isolation
Electrical isolation between input and output	yes
Limit frequency (3 dB)	approx. 100 Hz
Step response (10-90%)	≈ ms
Maximum temperature coefficient	< 0.01 %/K
Temperature coefficient, typical	< 0.002 %/K
Maximum transmission error	≤ 0.1 % (of final value)

Electrical isolation

Overvoltage category	II
Pollution degree	2

Electrical isolation Input/output/power supply IEC/EN 61010

Standards/regulations	IEC/EN 61010
Rated insulation voltage	30 V AC
	50 V DC
Test voltage	1.5 kV AC (50 Hz, 60 s)
Insulation	Basic insulation

Supply

Nominal supply voltage	24 V DC
Supply voltage range	19.2 V DC ... 30 V DC (The DIN rail connector (ME 6,2 TBUS-2 1,5/5-ST-3,81 GN, item no. 2869728) can be used to bridge the supply voltage. It can be snapped onto a 35 mm DIN rail in accordance with EN 60715)
Max. current consumption	< 9 mA
Power consumption	< 200 mW

Input data

Signal: Current

Number of inputs	1
Configurable/programmable	no

Current input signal	0 mA ... 20 mA
Max. current input signal	50 mA
Input resistance current input	approx. 50 Ω

Output data

Signal: Voltage

Number of outputs	1
Configurable/programmable	no
Voltage output signal	0 V ... 10 V
Max. voltage output signal	12.5 V
Short-circuit current	approx. 2 mA
Load/output load voltage output	≥ 10 kΩ
Ripple	< 20 mV_{PP} (at 10 kΩ)

Connection data

Connection method	Screw connection
Stripping length	12 mm
Screw thread	M3
Conductor cross-section rigid	0.2 mm² ... 2.5 mm²
Conductor cross-section flexible	0.2 mm² ... 2.5 mm²
Conductor cross-section AWG	26 ... 12

Dimensions

Dimensional drawing	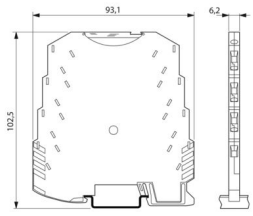
Width	6.2 mm
Height	93.1 mm
Depth	101.2 mm

Material specifications

Color	green (RAL 6021)
Housing material	PBT
Fire protection for rail vehicles (DIN EN 45545-2) R22	HL 1 - HL 2
Fire protection for rail vehicles (DIN EN 45545-2) R23	HL 1 - HL 2
Fire protection for rail vehicles (DIN EN 45545-2) R24	HL 1 - HL 2

Environmental and real-life conditions

Ambient conditions

Degree of protection	IP20

Ambient temperature (operation)	-20 °C ... 65 °C
Ambient temperature (storage/transport)	-40 °C ... 85 °C
Altitude	≤ 2000 m
Permissible humidity (operation)	5 % ... 95 % (non-condensing)

Approvals

CE

Certificate	CE-compliant

UL, USA/Canada

Identification	UL 508 Recognized
	Class I, Div. 2, Groups A, B, C, D T4

EMC data

Electromagnetic compatibility	Conformance with EMC directive
Noise immunity	EN 61000-6-2
Note	When being exposed to interference, there may be minimal deviations.

Noise emission

Standards/regulations	EN 61000-6-4

Electrostatic discharge

Standards/regulations	EN 61000-4-2

Electrostatic discharge

Comments	Safety measures must be taken to prevent electrostatic discharge.

Electromagnetic HF field

Designation	Electromagnetic RF field
Standards/regulations	EN 61000-4-3
Typical deviation from the upper range value	5 %

Fast transients (burst)

Designation	Fast transients (burst)
Standards/regulations	EN 61000-4-4
Typical deviation from the upper range value	5 %

Surge current load (surge)

Standards/regulations	EN 61000-4-5

Surge current load (surge)

Comments	Criterion B

Conducted interference

Designation	Conducted interferences
Standards/regulations	EN 61000-4-6

Typical deviation from the upper range value	5 %

Standards and regulations

Electrical isolation	3-way isolation

Mounting

Mounting type	DIN rail mounting
Assembly note	The DIN rail connector can be used for bridging the supply voltage. It can be snapped onto a 35 mm EN 60715 DIN rail.
Mounting position	any

Drawings

Dimensional drawing

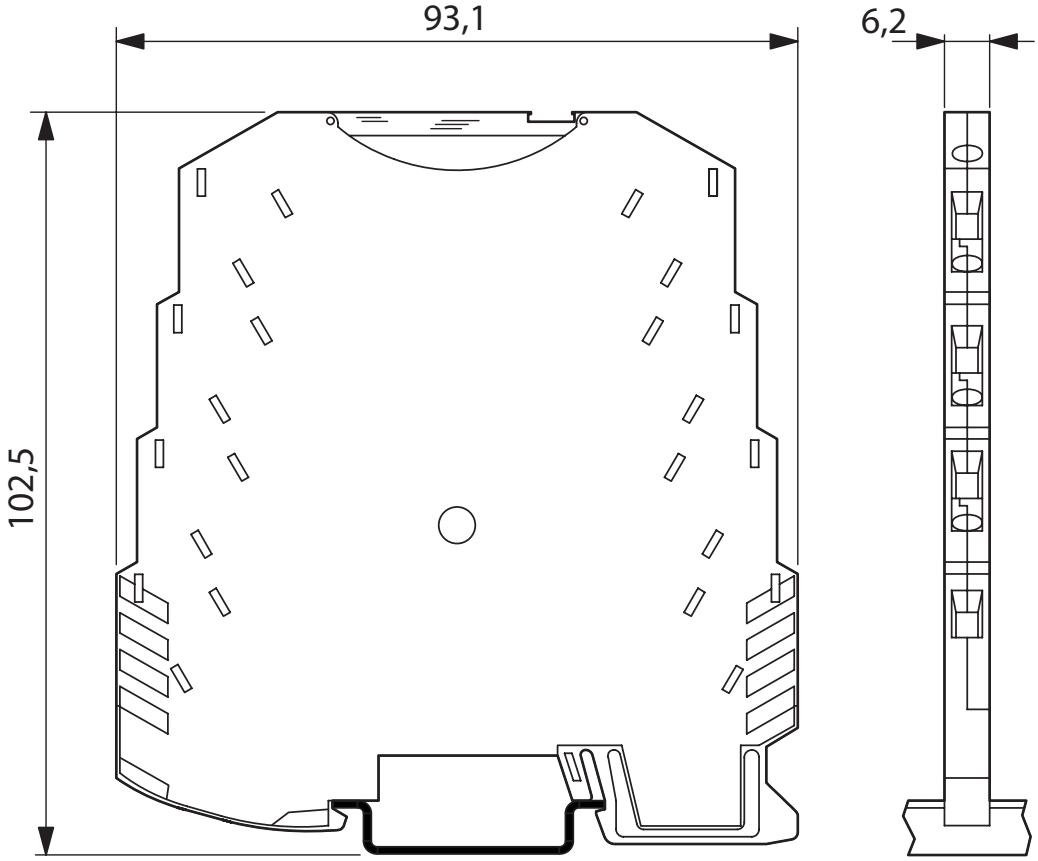

Block diagram

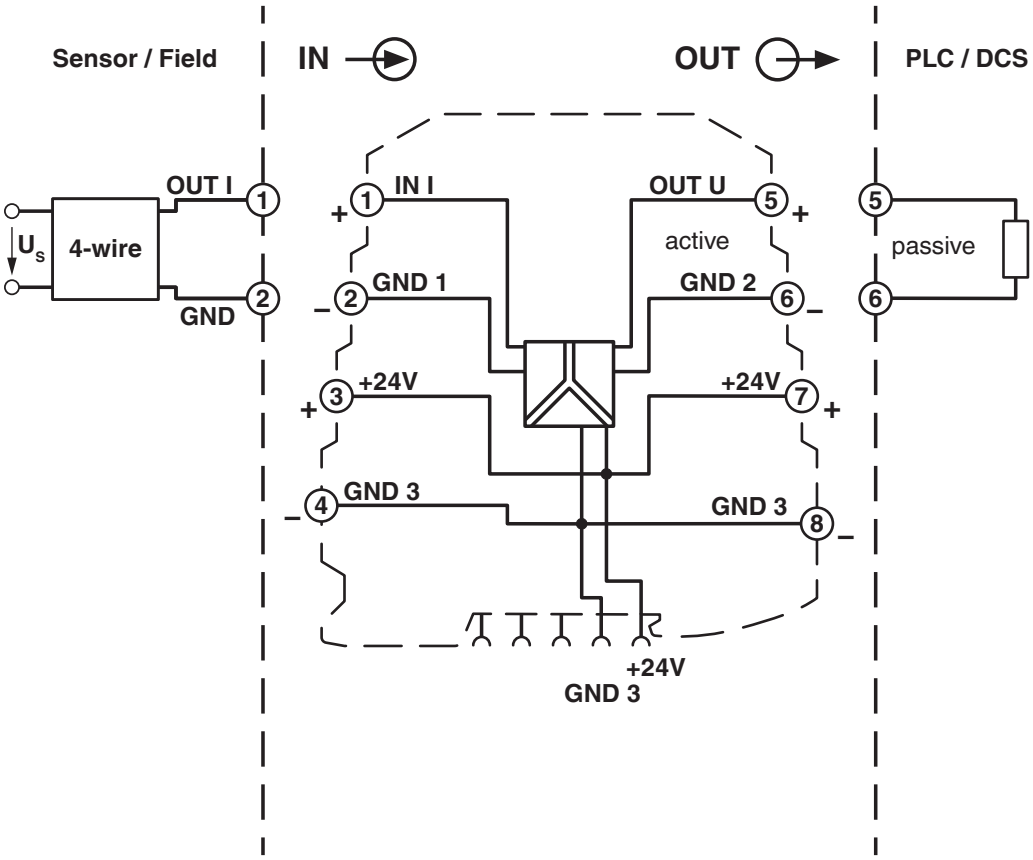

Approvals

To download certificates, visit the product detail page: https://www.phoenixcontact.com/us/products/2813541

cUL Recognized
Approval ID: E238705

UL Recognized
Approval ID: E238705

cUL Listed
Approval ID: E199827

UL Listed
Approval ID: E199827

Classifications

ECLASS

ECLASS-13.0	27210120
ECLASS-15.0	27210120

ETIM

ETIM 10.0	EC002653

UNSPSC

UNSPSC 21.0	39121000

Environmental product compliance

EU RoHS

Fulfills EU RoHS substance requirements	Yes
Exemption	6(c), 7(a), 7(c)-I

China RoHS

Environment friendly use period (EFUP)	EFUP-50
	An article-related China RoHS declaration table can be found in the download area for the respective article under "Manufacturer declaration". For all articles with EFUP-E, no China RoHS declaration table issued and required.

EU REACH SVHC

REACH candidate substance (CAS No.)	Lead(CAS: 7439-92-1)
SCIP	d708aef2-9dce-4d0e-af21-f02a6c6eb899

Phoenix Contact 2026 © - all rights reserved
https://www.phoenixcontact.com

Phoenix Contact USA
586 Fulling Mill Road
Middletown, PA 17057, United States
(+717) 944-1300
info@phoenixcon.com