# BC 161,6 OT 001101 BK - Upper housing part

2202467

https://www.phoenixcontact.com/us/products/2202467

Please be informed that the data shown in this PDF document is generated from our online catalog. Please find the complete data in the user documentation. Our general terms of use for downloads are valid.



DIN rail housing for use in distribution boards in accordance with DIN 43880, modular upper housing part, width: 161.6 mm, height: 89.7 mm, depth: 54.85 mm, color: black (similar RAL 9005)

## Your advantages

- Coordinated housing and connection system for faster device development
- Individual online configuration for diverse applications in building automation
- Variety of connection technology
- Can be mounted on the DIN rail or the wall
- With DIN-rail-mountable bus connector and power connector system as an option
- Tool-free mounting
- Available in overall widths from 1 ... 12 HP (17.8 mm ... 215.6 mm)
- Compliant with DIN EN 43880

## Commercial data

| | |
|---|---|
| Item number | 2202467 |
| Packing unit | 10 pc |
| Minimum order quantity | 10 pc |
| Note | Made to order (non-returnable) |
| Sales key | AC10 |
| Product key | ACHBAB |
| GTIN | 4055626122519 |
| Weight per piece (including packing) | 36.235 g |
| Weight per piece (excluding packing) | 36.235 g |
| Customs tariff number | 84879090 |
| Country of origin | DE |

## Technical data

### Notes

| | |
|---|---|
| Assembly note | Please observe the application note in the download area. |

### Product properties

| | |
|---|---|
| Product type | Upper housing part |
| Housing type | DIN rail housing for use in distribution boards in accordance with DIN 43880 |
| Housing type | Modular building installation housings |
| Housing series | BC |
| Product family | BC 161,6.. |
| Ventilation openings present | yes |
| Anzahl der Etagen Housing (Makro) | 1 (Both sides) |

### Dimensions

| | |
|---|---|
| Dimensional drawing | 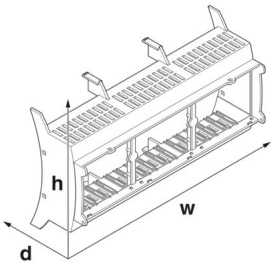 |
| Width | 161.6 mm |
| Height | 89.7 mm |
| Depth | 54.85 mm |
| Horizontal pitch | 9 HP |

PCB design

| | |
|---|---|
| PCB thickness | 1.4 mm ... 1.8 mm |

### Material specifications

| | |
|---|---|
| Color (Upper housing part) | black (RAL 9005) |
| Material Upper housing part | PC |
| Flammability rating according to UL 94 | V0 |

### Environmental and real-life conditions

Power dissipation single housing for 20 °C

| | |
|---|---|
| Ambient temperature | 20 °C |
| Reduction factor | 1 |
| Mounting position | vertical |
| Power dissipation | 16.95 W |

Power dissipation single housing for 30 °C

| | |
|---|---|
| Ambient temperature | 30 °C |
| Reduction factor | 0.84 |
| Mounting position | vertical |
| Power dissipation | 14.2 W |

Power dissipation single housing for 40 °C

| | |
|---|---|
| Ambient temperature | 40 °C |
| Reduction factor | 0.72 |
| Mounting position | vertical |
| Power dissipation | 12.2 W |

Power dissipation single housing for 50 °C

| | |
|---|---|
| Ambient temperature | 50 °C |
| Reduction factor | 0.6 |
| Mounting position | vertical |
| Power dissipation | 10.2 W |

Power dissipation single housing for 60 °C

| | |
|---|---|
| Ambient temperature | 60 °C |
| Reduction factor | 0.48 |
| Mounting position | vertical |
| Power dissipation | 8.1 W |

Power dissipation single housing for 70 °C

| | |
|---|---|
| Ambient temperature | 70 °C |
| Reduction factor | 0.38 |
| Mounting position | vertical |
| Power dissipation | 6.4 W |

Vibration test

| | |
|---|---|
| Specification | IEC 60068-2-6:2007-12 |
| Frequency | 10 - 150 - 10 Hz |
| Sweep speed | 1 octave/min |
| Amplitude | 0.15 mm (10 Hz ... 58.1 Hz) |
| Acceleration | 2g (58.1 Hz ... 150 Hz) |
| Test duration per axis | 2.5 h |
| Test directions | X-, Y- and Z-axis |

Glow-wire test

| | |
|---|---|
| Specification | IEC 60695-2-11:2014-02 |
| Temperature | 850 °C |
| Time of exposure | 30 s |

Mechanical strength / tumbling barrel

| | |
|---|---|
| Specification | IEC 60068-2-31:2008-05 |
| Height of fall | 50 cm |

| | |
|---|---|
| Frequency | 50 |

Shocks

| | |
|---|---|
| Specification | IEC 60068-2-27:2008-02 |
| Pulse shape | Half-sine |
| Acceleration | 15g |
| Shock duration | 11 ms |
| Number of shocks per direction | 3 |
| Test directions | X-, Y- and Z-axis (pos. and neg.) |

Degree of protection (IP code)

| | |
|---|---|
| Specification | IEC 60529:1989-11 + AMD 1:1999-11 + AMD 2:2013-08 |

Ambient conditions

| | |
|---|---|
| Max. IP code to attain | IP20 |
| Ambient temperature (operation) | -40 °C ... 105 °C (depending on power dissipation) |
| Ambient temperature (storage/transport) | -40 °C ... 70 °C |
| Ambient temperature (assembly) | -5 °C ... 100 °C |
| Relative humidity (storage/transport) | 95 % |

## PCB data

| | |
|---|---|
| Number of PCB holders | 18 |
| Type of PCB mount | Latching |
| Thickness of the PCB | 1.4 mm ... 1.8 mm |

## Mounting

| | |
|---|---|
| Mounting type | Snap in |

## Packaging specifications

| | |
|---|---|
| Type of packaging | packed in cardboard |
| Outer packaging type | Carton |

## Drawings

Dimensional drawing

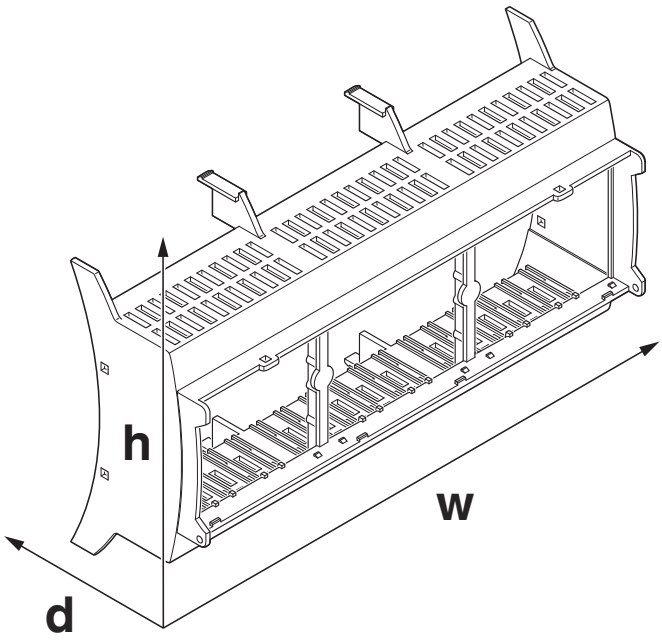


Schematic figure for illustrating the item dimensions. The figure is not of the desired product. For further details, refer to the product drawings in the “Downloads” tab.

Diagram

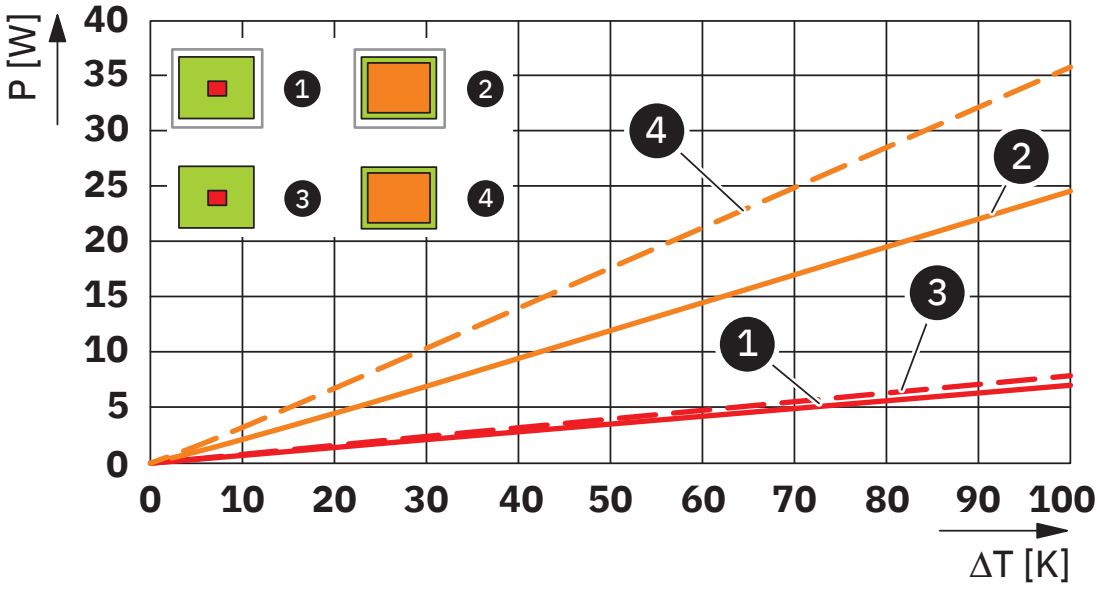


Power dissipation diagram for 0 K ... 100 K

Diagram

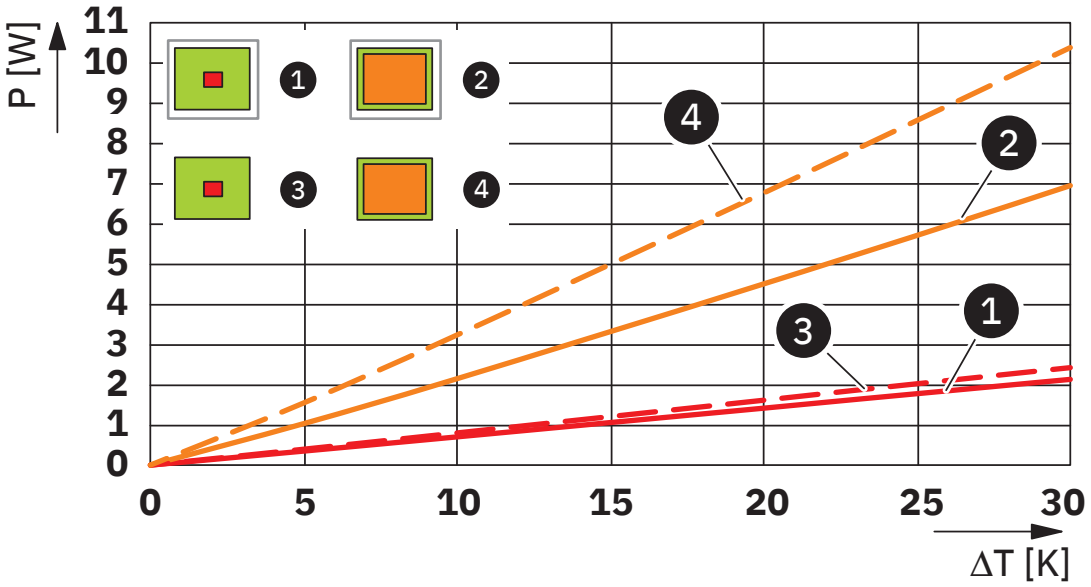


Power dissipation diagram for 0 K ... 30 K

## Approvals

To download certificates, visit the product detail page: https://www.phoenixcontact.com/us/products/2202467

**UL Recognized**
Approval ID: E240868

## Classifications

### ECLASS

| | |
|---|---|
| ECLASS-13.0 | 27190603 |
| ECLASS-15.0 | 27190603 |

### UNSPSC

| | |
|---|---|
| UNSPSC 21.0 | 31261501 |

## Environmental product compliance

EU RoHS

| | |
|---|---|
| Fulfills EU RoHS substance requirements | Yes, No exemptions |

China RoHS

| | |
|---|---|
| Environment friendly use period (EFUP) | EFUP-E |
| | No hazardous substances above the limits |

EU REACH SVHC

| | |
|---|---|
| REACH candidate substance (CAS No.) | No substance above 0.1 wt% |

EF3.1 Climate Change

| | |
|---|---|
| CO2e kg | 0.233 kg CO2e |


Phoenix Contact 2026 © - all rights reserved
https://www.phoenixcontact.com



Phoenix Contact USA
586 Fulling Mill Road
Middletown, PA 17057, United States
(+717) 944-1300
info@phoenixcon.com