ME-IO 18,8 B/FE 5/9U TBUS 7035 - Mounting base housing

2201962

https://www.phoenixcontact.com/us/products/2201962

Please be informed that the data shown in this PDF document is generated from our online catalog. Please find the complete data in the user documentation. Our general terms of use for downloads are valid.



DIN rail housing, Lower housing part, with metal foot catch, with functional ground contact, with 5U Lock and Release system, with vents, width: 18.9 mm, height: 109.6 mm, depth: 64.3 mm, color: light gray (similar RAL 7035), cross connection: DIN rail bus connector (optional), number of positions cross connector: 5

Your advantages

- Easy, tool-free mounting
- Optional DIN rail connector for easy module-to-module communication
- Lock and Release principle for automatic latching and intuitive release of the front connection plug
- Plastic in accordance with UL94 V0: for more rigorous flammability requirements
- Integrated FE contact for simple electromagnetically compatible installation
- L-design: ideal for flush integration of standard interfaces such as RJ45

Commercial data

Item number	2201962
Packing unit	1 pc
Note	Made to order (non-returnable)
Sales key	AC15
Product key	ACHEBA
GTIN	4046356946452
Weight per piece (including packing)	35.36 g
Weight per piece (excluding packing)	35.36 g
Customs tariff number	85389099
Country of origin	DE

ME-IO 18,8 B/FE 5/9U TBUS 7035 - Mounting base housing

2201962

https://www.phoenixcontact.com/us/products/2201962

Technical data

Notes

Assembly note	Please observe the application note in the download area.
Recommendation	Material of contact pads for bus connector, galvanic gold (hard gold)

Product properties

Housing type	DIN rail housing
Max. number of positions	20 (pitch: 5 mm)
	30 (pitch: 3.45 mm)
Ventilation openings present	yes

Dimensions

Dimensional drawing	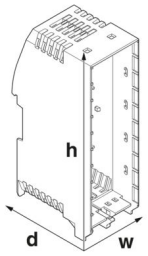
Width	18.9 mm
Height	109.6 mm
Depth	64.3 mm
Depth from top edge of DIN rail	57.7 mm

Material specifications

Color	light gray (RAL 7035)
Flammability rating according to UL 94	V0
Housing material	PA

Environmental and real-life conditions

Ambient conditions

Max. IP code to attain	IP20
Ambient temperature (operation)	-40 °C ... 105 °C (depending on power dissipation)
Ambient temperature (storage/transport)	-40 °C ... 55 °C
Ambient temperature (assembly)	-5 °C ... 100 °C
Relative humidity (storage/transport)	80 %

PCB data

Number of PCB holders	1
Type of PCB mount	Latching

Mounting

Mounting type	DIN rail mounting

Packaging specifications

Type of packaging	packed in cardboard
Outer packaging type	Carton

Drawings

Dimensional drawing

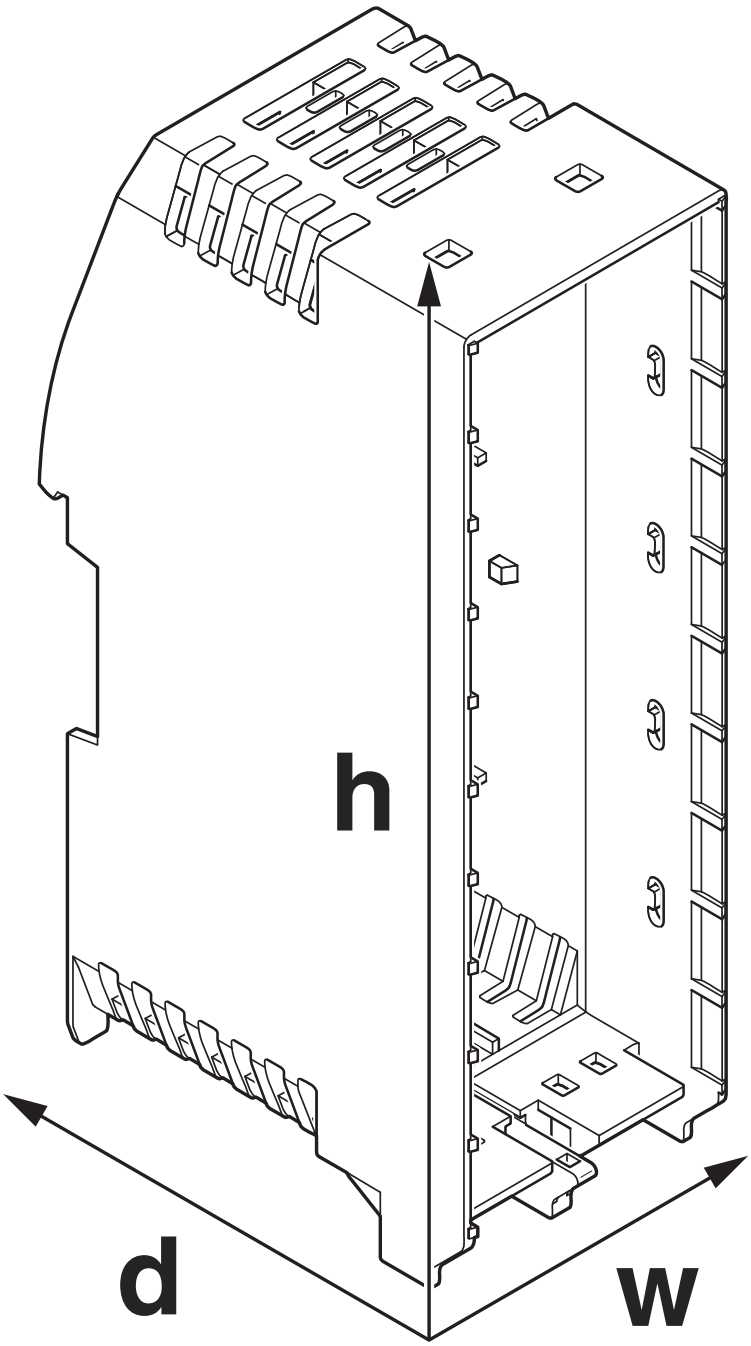

Schematic figure for illustrating the item dimensions. The figure is not of the desired product. For further details, refer to the product drawings in the “Downloads” tab.

Dimensional drawing

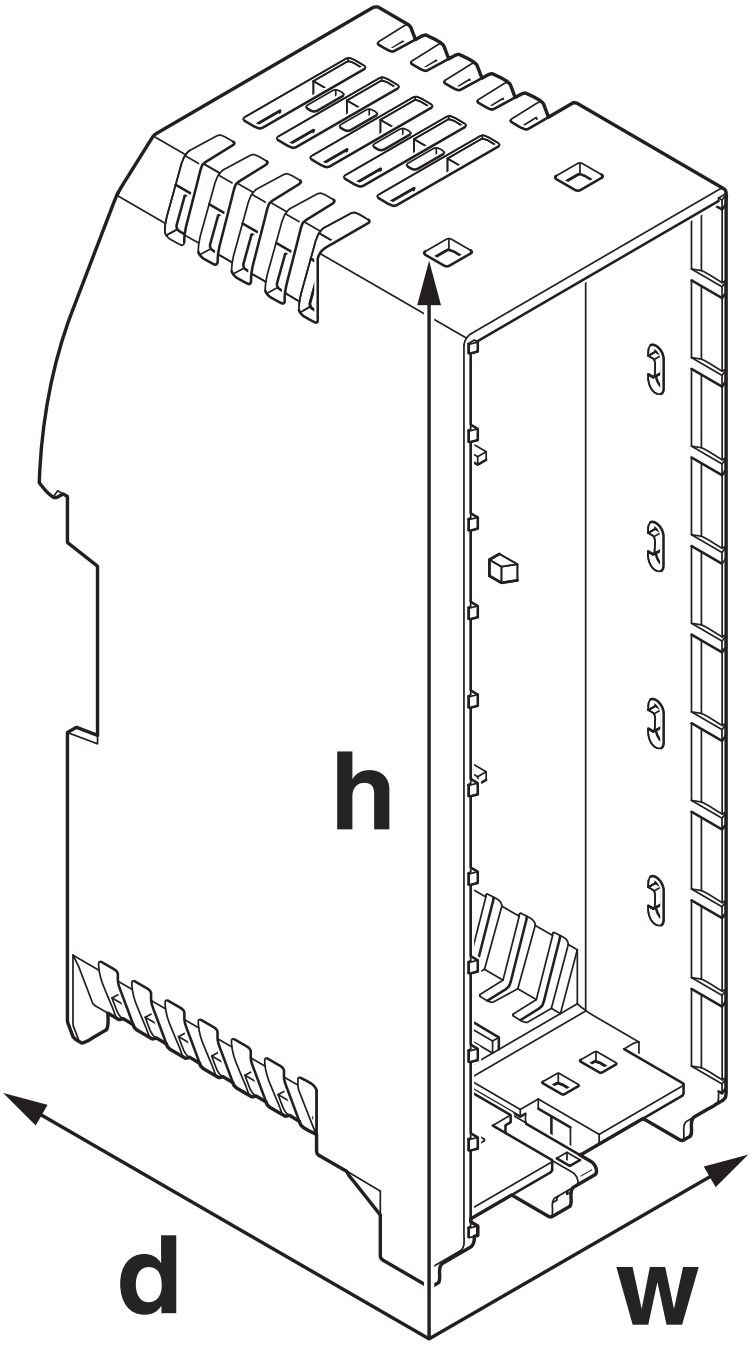

Classifications

ECLASS

ECLASS-15.0	27190601

UNSPSC

UNSPSC 21.0	31261501

Environmental product compliance

EU RoHS

Fulfills EU RoHS substance requirements	Yes, No exemptions

China RoHS

Environment friendly use period (EFUP)	EFUP-E
	No hazardous substances above the limits

EU REACH SVHC

REACH candidate substance (CAS No.)	No substance above 0.1 wt%

Phoenix Contact 2026 © - all rights reserved
https://www.phoenixcontact.com

Phoenix Contact USA
586 Fulling Mill Road
Middletown, PA 17057, United States
(+717) 944-1300
info@phoenixcon.com