HSCP-SP 2,5-1U4-7035 - PCB connector

2201780

https://www.phoenixcontact.com/us/products/2201780

Please be informed that the data shown in this PDF document is generated from our online catalog. Please find the complete data in the user documentation. Our general terms of use for downloads are valid.

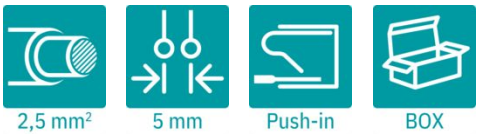



PCB connector, nominal cross section: 2.5 mm², color: light gray, nominal current: 8 A, rated voltage (III/2): 320 V, contact surface: Sn, contact connection type: Socket, number of potentials: 4, number of rows: 2, number of positions: 4, number of connections: 4, product range: HSCP-SP 2,5-.., pitch: 5 mm, connection method: Push-in spring connection, conductor/PCB connection direction: 0 °, locking clip: - Locking clip, plug-in system: HSC 2,5, locking: without, mounting method: without, type of packaging: packed in cardboard, Color of the spring lever: orange

Your advantages

- Time saving push-in connection, tools not required
- Defined contact force ensures that contact remains stable over the long term
- Intuitive operation due to color-coded actuating push button
- Operation and conductor connection from one direction enable integration into front of device
- Quick and convenient testing using integrated test option
- User-friendly front connection plug for high contact densities

Commercial data

Item number	2201780
Packing unit	50 pc
Minimum order quantity	50 pc
Sales key	AC15
Product key	ACHECB
GTIN	4046356911436
Weight per piece (including packing)	3.52 g
Weight per piece (excluding packing)	3.426 g
Customs tariff number	85366990
Country of origin	BG

Technical data

Product properties

Product type	PCB connector
Product family	HSCP-SP 2,5-..
Type	Standard
Number of positions	4
Pitch	5 mm
Number of connections	4
Number of rows	2
Number of potentials	4

Fitting of components

Partial assembly	No

Electrical properties

Properties

Nominal current I_N	8 A
Nominal voltage U_N	320 V
Contact resistance	2 mΩ
Rated voltage (III/3)	250 V
Rated surge voltage (III/3)	4 kV
Rated voltage (III/2)	320 V
Rated surge voltage (III/2)	4 kV
Rated voltage (II/2)	600 V
Rated surge voltage (II/2)	4 kV

Connection data

Connection technology

Connector system	HSC 2,5
Nominal cross section	2.5 mm²
Contact connection type	Socket

Interlock

Locking type	without
Mounting type	without

Conductor connection

Connection method	Push-in spring connection
Conductor/PCB connection direction	0 °
Conductor cross-section rigid	0.2 mm² ... 1.5 mm²
Conductor cross-section flexible	0.2 mm² ... 2.5 mm²
Conductor cross-section AWG	24 ... 16
Conductor cross-section, flexible, with ferrule, without plastic	0.25 mm² ... 1.5 mm²

sleeve	
Conductor cross-section, flexible, with ferrule, with plastic sleeve	0.25 mm² ... 1.5 mm²
Cylindrical gauge a x b / diameter	2.4 mm x 1.5 mm / 1.9 mm
Stripping length	10 mm

Material specifications

Material data - contact

Note	WEEE/RoHS-compliant, free of whiskers according to IEC 60068-2-82/JEDEC JESD 201
Contact material	Cu alloy
Surface characteristics	Tin-plated
Metal surface terminal point (top layer)	Tin (Sn)
Metal surface contact area (top layer)	Tin (Sn)

Material data - housing

Color (Housing)	light gray (7035)
Insulating material	PA
Insulating material group	I
CTI according to IEC 60112	600
Flammability rating according to UL 94	V0
Glow wire flammability index GWFI according to EN 60695-2-12	850
Glow wire ignition temperature GWIT according to EN 60695-2-13	775
Temperature for the ball pressure test according to EN 60695-10-2	125 °C

Material data – actuating element

Color (Actuating element)	deep orange (2011)
Insulating material	PBT
Insulating material group	IIIa
CTI according to IEC 60112	275
Flammability rating according to UL 94	V0

Dimensions

Pitch	5 mm
Width [w]	18.8 mm
Height [h]	10.9 mm
Length [l]	21.6 mm

Notes

Assembly note	Please observe the application note in the download area.

Safety note

Safety note	WARNING: The connectors may not be plugged in or disconnected under load. Ignoring the warning or improper use may damage persons and/or property.
	• WARNING: Commission properly functioning products only.

	The products must be regularly inspected for damage. Decommission defective products immediately. Replace damaged products. Repairs are not possible.
	• WARNING: Only electrically qualified personnel may install and operate the product. They must observe the following safety notes. The qualified personnel must be familiar with the basics of electrical engineering. They must be able to recognize and prevent danger. The relevant symbol on the packaging indicates that only personnel familiar with electrical engineering are allowed to install and operate the product.
	• The item is intended to be an unencapsulated plug for installation in a housing.
	• Operate the connector only when it is fully plugged in.

Mechanical tests

Conductor connection

Specification	IEC 60999-1:1999-11
Result	Test passed

Test for conductor damage and slackening

Specification	IEC 60999-1:1999-11
Result	Test passed

Repeated connection and disconnection

Specification	IEC 60999-1:1999-11
Result	Test passed

Pull-out test

Specification	IEC 60999-1:1999-11
Conductor cross-section/conductor type/tractive force setpoint/actual value	0.2 mm² / solid / > 10 N
	0.2 mm² / flexible / > 10 N
	1.5 mm² / solid / > 40 N
	2.5 mm² / flexible / > 50 N

Insertion and withdrawal forces

Specification	IEC 60512-13-2:2006-02
Result	Test passed
No. of cycles	25
Insertion strength per pos. approx.	5 N
Withdraw strength per pos. approx.	4 N

Resistance of inscriptions

Specification	IEC 60068-2-70:1995-12
Result	Test passed

Polarization and coding

Specification	IEC 60512-13-5:2006-02
Result	Test passed

Visual inspection

Specification	IEC 60512-1-1:2002-02
Result	Test passed

Dimension check

Specification	IEC 60512-1-2:2002-02
Result	Test passed

Environmental and real-life conditions

Durability test

Specification	IEC 60512-9-1:2010-03
Impulse withstand voltage at sea level	4.8 kV
Contact resistance R_1	2 mΩ
Contact resistance R_2	2.2 mΩ
Insertion/withdrawal cycles	25
Insulation resistance, neighboring positions	> 5 MΩ

Climatic test

Specification	ISO 6988:1985-02
Corrosive stress	0.2 dm^3 SO_2 on 300 dm^3/40 °C/1 cycle
Thermal stress	100 °C/168 h
Power-frequency withstand voltage	2.2 kV

Vibration test

Specification	IEC 60068-2-6:2007-12
Frequency	10 - 150 - 10 Hz
Sweep speed	1 octave/min
Amplitude	0.35 mm (10 Hz ... 60.1 Hz)
Acceleration	5g (60.1 Hz ... 150 Hz)
Test duration per axis	2.5 h
Test directions	X-, Y- and Z-axis

Ambient conditions

Ambient temperature (storage/transport)	-40 °C ... 55 °C
Relative humidity (storage/transport)	30 % ... 70 %
Ambient temperature (assembly)	-5 °C ... 100 °C
Ambient temperature (operation)	-40 °C ... 105 °C (dependent on the derating curve)

Electrical tests

Thermal test | Test group C

Specification	IEC 60512-5-1:2002-02
Tested number of positions	4

Insulation resistance

Specification	IEC 60512-3-1:2002-02

Insulation resistance, neighboring positions	> 15 TΩ

Air clearances and creepage distances |

Specification	IEC 60664-1:2007-04
Insulating material group	I
Comparative tracking index (IEC 60112)	CTI 600
Rated insulation voltage (III/3)	250 V
Rated surge voltage (III/3)	4 kV
minimum clearance value - non-homogenous field (III/3)	3 mm
minimum creepage distance (III/3)	3.2 mm
Rated insulation voltage (III/2)	320 V
Rated surge voltage (III/2)	4 kV
minimum clearance value - non-homogenous field (III/2)	3 mm
minimum creepage distance (III/2)	3 mm
Rated insulation voltage (II/2)	600 V
Rated surge voltage (II/2)	4 kV
minimum clearance value - non-homogenous field (II/2)	3 mm
minimum creepage distance (II/2)	3.2 mm

Packaging specifications

Type of packaging	packed in cardboard

Drawings

Schematic diagram

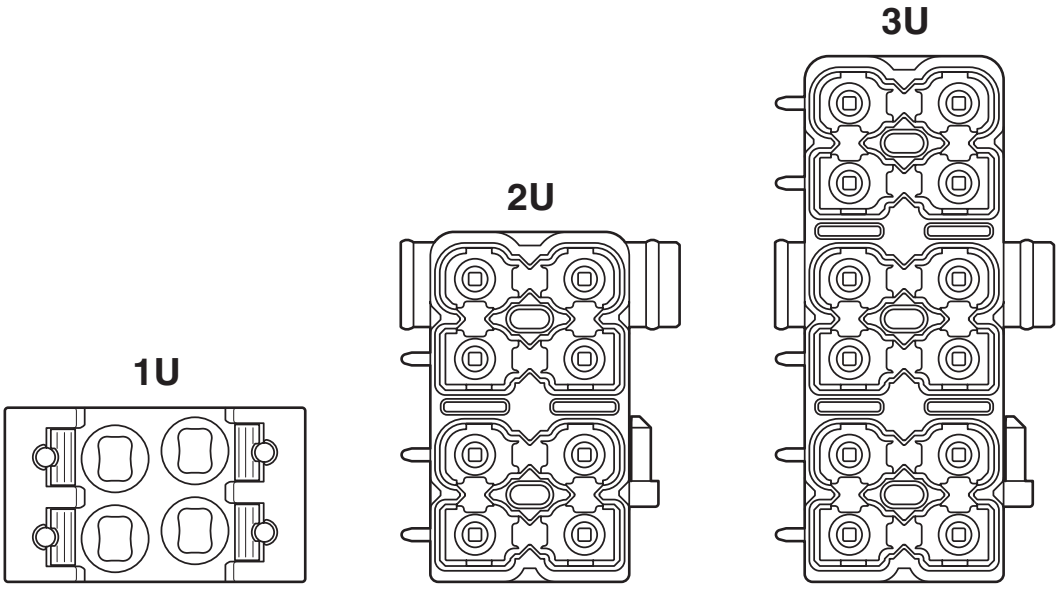

Schematic diagram

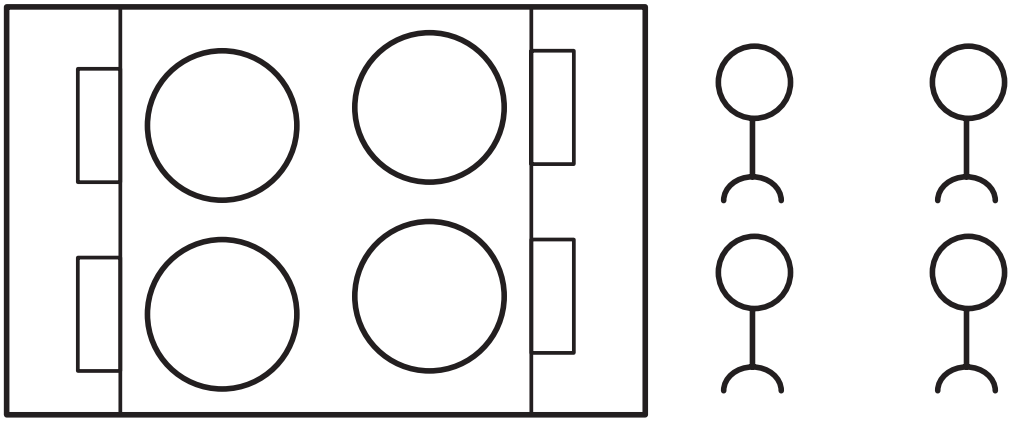

Schematic diagram

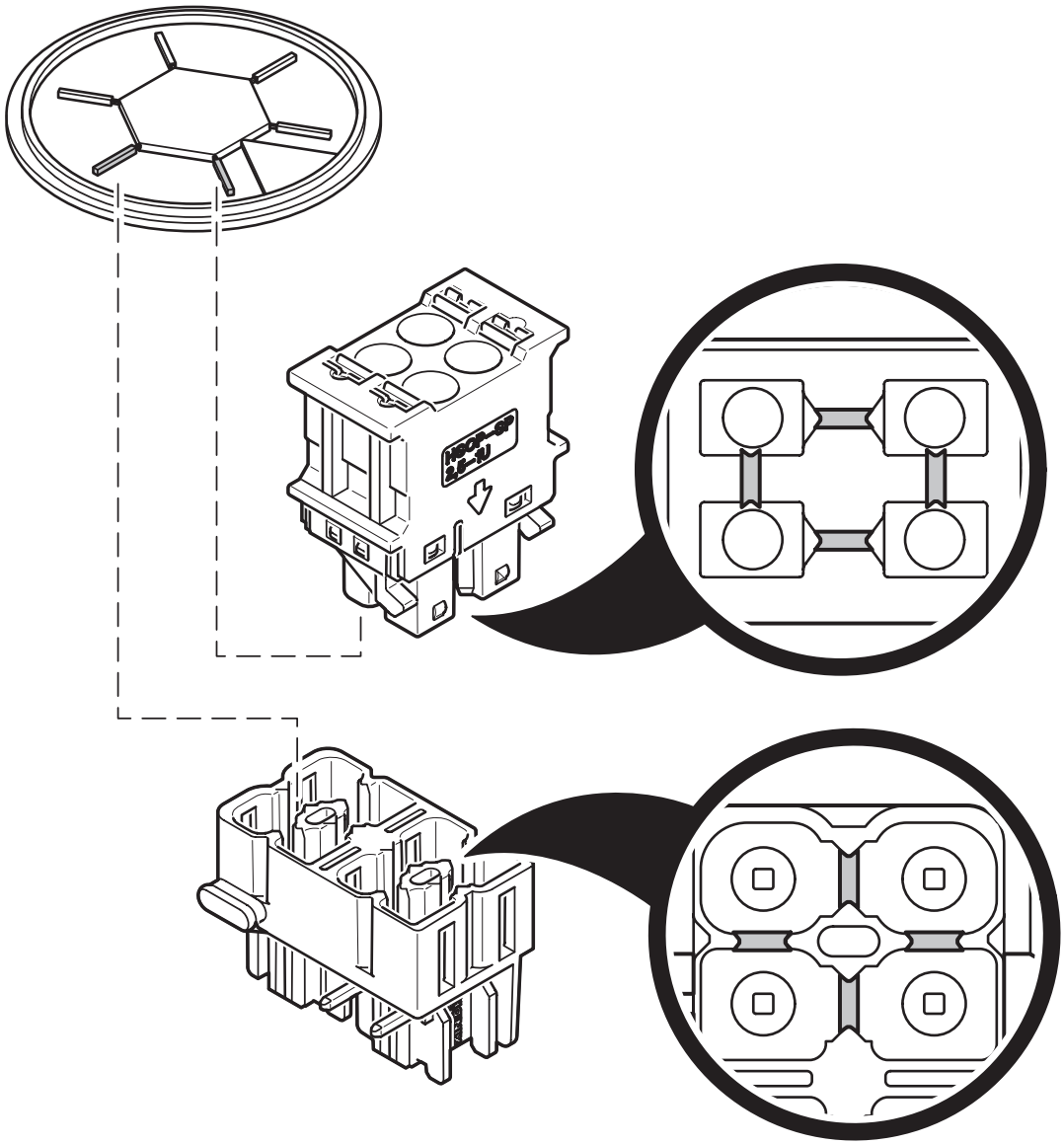

Schematic diagram

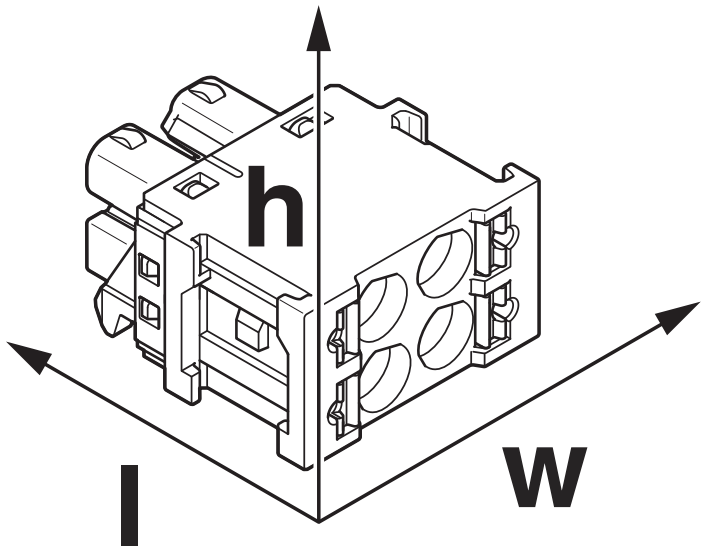

Diagram

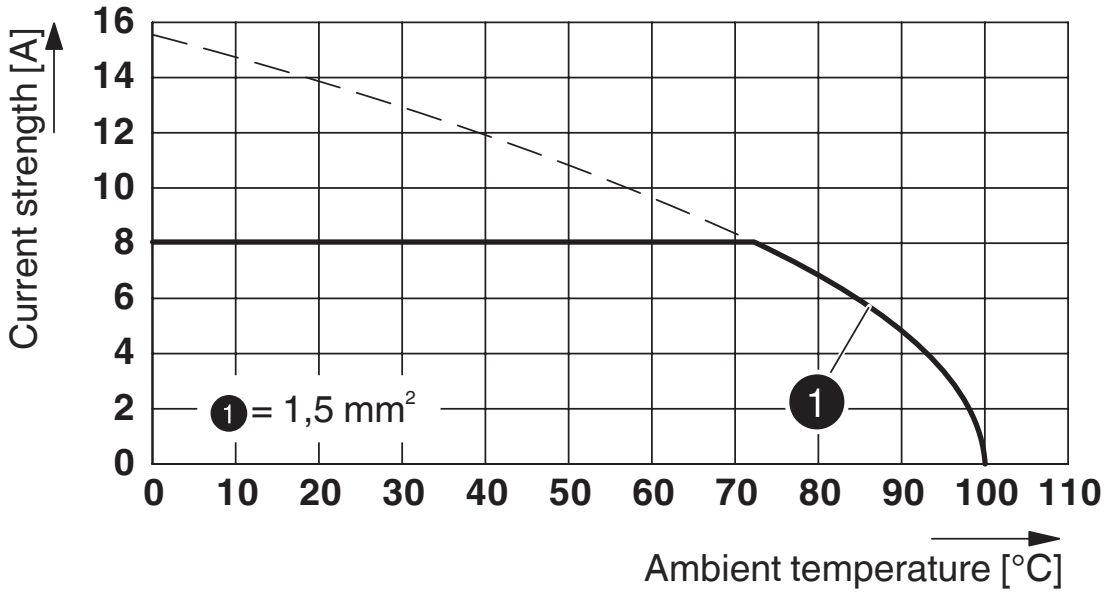

Type: HSCP-SP 2,5... with HSCH 2,5...

Diagram

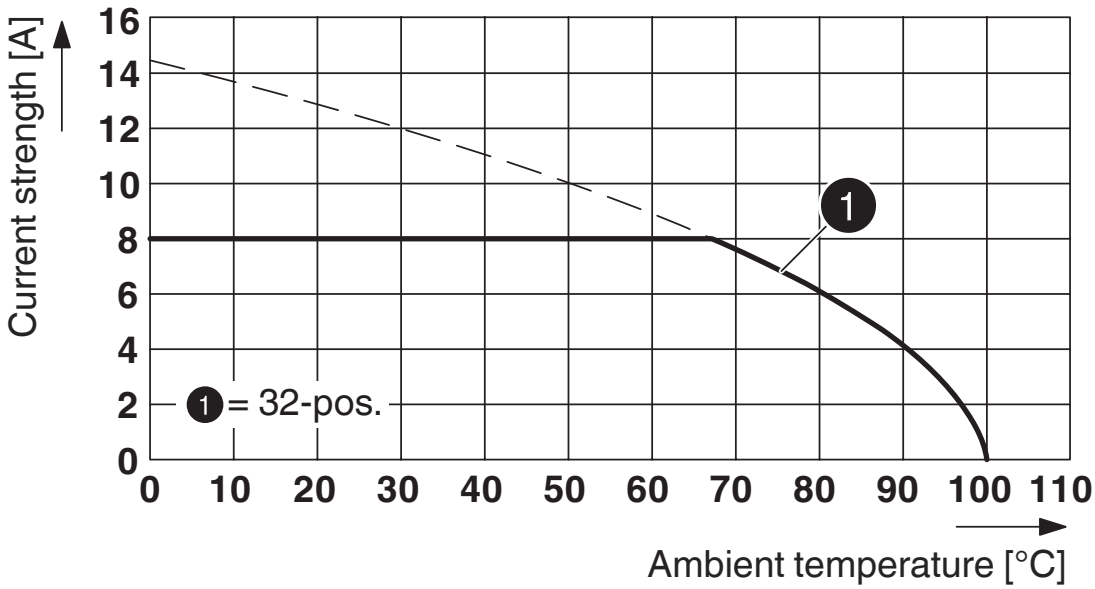

Type: HSCP-SP 2,5-... with HSCH 2,5-...U/... THR 9005

Approvals

To download certificates, visit the product detail page: https://www.phoenixcontact.com/us/products/2201780

cULus Recognized
Approval ID: E60425-20150613

	Nominal voltage U_N	Nominal current I_N	Cross section AWG	Cross section mm^2
B				
	150 V	8 A	24 - 16	-
Only flexible conductors	150 V	8 A	24 - 14	-
D				
	300 V	8 A	24 - 16	-
Only flexible conductors	300 V	8 A	24 - 14	-

VDE Zeichengenehmigung
Approval ID: 40045764

	Nominal voltage U_N	Nominal current I_N	Cross section AWG	Cross section mm^2
keine				
	630 V	8 A	-	0.2 - 2.5

Classifications

ECLASS

ECLASS-13.0	27460202
ECLASS-15.0	27460202

ETIM

ETIM 10.0	EC002638

UNSPSC

UNSPSC 21.0	39121400

Environmental product compliance

EU RoHS

Fulfills EU RoHS substance requirements	Yes, No exemptions

China RoHS

Environment friendly use period (EFUP)	EFUP-E
	No hazardous substances above the limits

EU REACH SVHC

REACH candidate substance (CAS No.)	No substance above 0.1 wt%

Phoenix Contact 2026 © - all rights reserved
https://www.phoenixcontact.com

Phoenix Contact USA
586 Fulling Mill Road
Middletown, PA 17057, United States
(+717) 944-1300
info@phoenixcon.com