HC-D 50-AMQ - Housing

1775868

https://www.phoenixcontact.com/us/products/1775868

Please be informed that the data shown in this PDF document is generated from our online catalog. Please find the complete data in the user documentation. Our general terms of use for downloads are valid.



Panel mounting base D50, with double locking latch, material: Die-cast aluminum, height: 28 mm, cable gland: none, Standard

Commercial data

Item number	1775868
Packing unit	1 pc
Note	Made to order (non-returnable)
Sales key	BF55
Product key	AF7AAE
GTIN	4017918038410
Weight per piece (including packing)	174.68 g
Weight per piece (excluding packing)	174.68 g
Customs tariff number	85389099
Country of origin	DE

Technical data

Notes

General	For contact inserts HC-D25, A16/A32

Product properties

Product type	Housing with locking latch
Housing type	Panel mounting base
Application	Standard
Type	D50
Shielded	no
Pg screw connection	none

Dimensions

Dimensional drawing	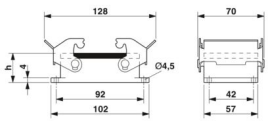
Width	57 mm
Height	28 mm
Length	102 mm

Installation dimensions

Width of the assembly cutout	48 mm
Length of the assembly cutout	76 mm

Material specifications

Seal material	NBR
Housing material	Die-cast aluminum
Housing surface material	Powder-coated, gray
Locking latch material	Steel, galvanized

Mechanical properties

Mechanical data

Locking type	Latch

Environmental and real-life conditions

Ambient conditions

Degree of protection	IP65
Ambient temperature (operation)	-40 °C ... 125 °C

Drawings

Dimensional drawing

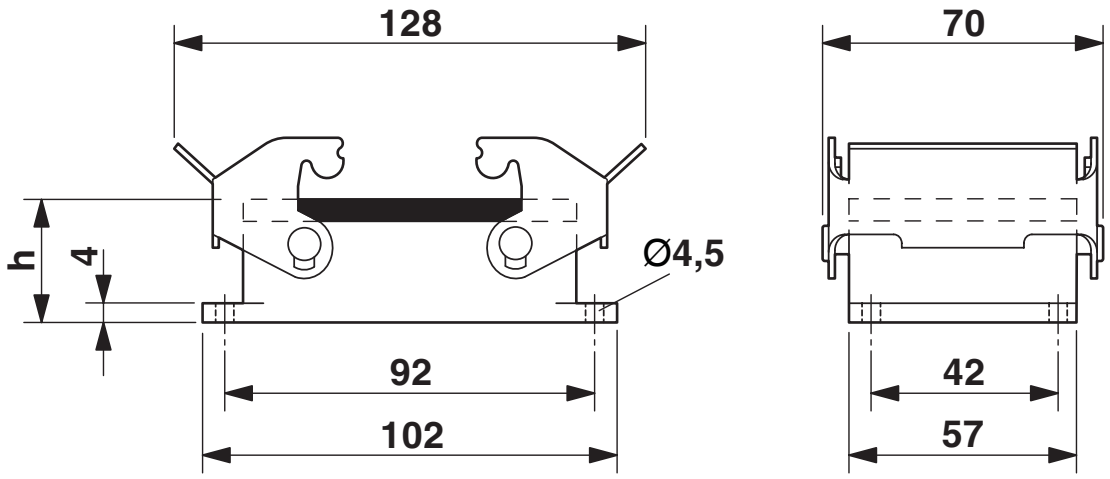

Dimensional drawing

Dimensional drawing

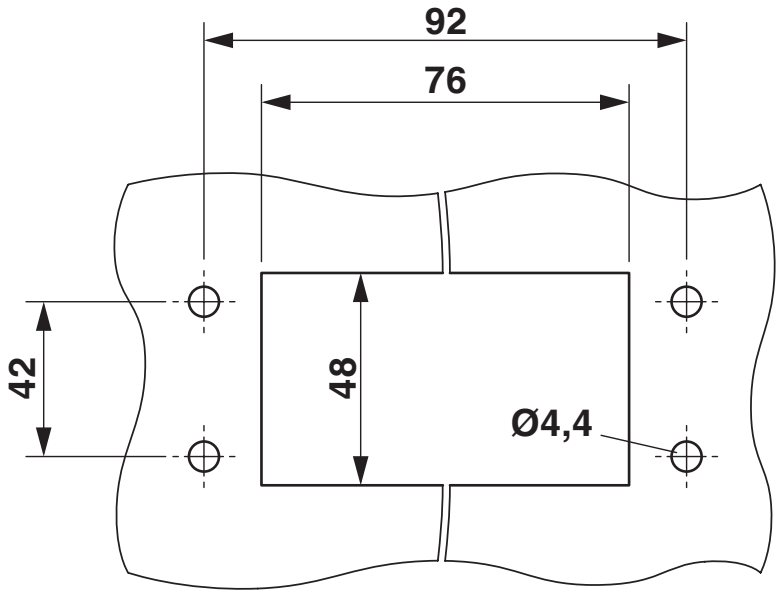

Mounting cutout

Classifications

ECLASS

ECLASS-13.0	27440202
ECLASS-15.0	27440202

Environmental product compliance

EU RoHS

Fulfills EU RoHS substance requirements	Yes, No exemptions

China RoHS

Environment friendly use period (EFUP)	EFUP-E
	No hazardous substances above the limits

EU REACH SVHC

REACH candidate substance (CAS No.)	No substance above 0.1 wt%

Phoenix Contact 2026 © - all rights reserved
https://www.phoenixcontact.com

Phoenix Contact USA
586 Fulling Mill Road
Middletown, PA 17057, United States
(+717) 944-1300
info@phoenixcon.com