SAC-5P- 5,0-547/MINFS - Power cable

1416632

https://www.phoenixcontact.com/us/products/1416632

Please be informed that the data shown in this PDF document is generated from our online catalog. Please find the complete data in the user documentation. Our general terms of use for downloads are valid.



Power cable, 5-position, PVC, yellow, free cable end, on Socket straight 7/8"-16UNF, coding: A, cable length: 5 m

Your advantages

- Easy and safe: 100 % electrically tested plug-in components

Commercial data

Item number	1416632
Packing unit	1 pc
Minimum order quantity	1 pc
Note	Made to order (non-returnable)
Sales key	BF14
Product key	AF1IMA
GTIN	4055626221755
Weight per piece (including packing)	22.22 g
Weight per piece (excluding packing)	22.22 g
Customs tariff number	85444290
Country of origin	MX

Technical data

Product properties

Product type	Sensor/actuator cable
Application	Standard
Number of positions	5
No. of cable outlets	1
Shielded	no
Coding	A

Material specifications

Flammability rating according to UL 94	V0
Material of grip body	PVC
Contact material	CuZn
Contact surface material	Au
Contact carrier material	PVC
Material for screw connection	Anodized aluminum

Electrical properties

Insulation resistance	≥ 100 MΩ
Nominal voltage U_N	300 V AC/DC (UL rating)
	50 V AC/DC (IEC rating)
Nominal current I_N	8 A

Mechanical properties

Mechanical data

Insertion/withdrawal cycles	100

Signaling

Status display	no
Status display present	no

Connection data

Conductor connection

Tightening torque	10 lb_f-in.
	1.12 Nm

Connector

Connection 1

Type	free cable end

Connection 2

Type	Socket straight 7/8"-16UNF

Number of positions	5
Coding type	A

Cable/line

Cable length	5 m

PVC AWG 18 yellow 105°C [547]

Dimensional drawing	
UL AWM Style	2517 (105 °C / 300 V)
Number of positions	5
Shielded	no
Cable type	PVC AWG 18 yellow 105°C [547]
Conductor structure signal line	41x 0.16 mm
AWG signal line	18
Wire diameter incl. insulation	1.7 mm ±0.03 mm
External cable diameter	6.60 mm ±0.2 mm
Outer sheath, material	PVC
External sheath, color	yellow
Conductor material	Tin-plated Cu litz wires
Material, filler	PP
Material wire insulation	PVC
Single wire, color	brown, white, blue, black, gray
Overall twist	5 wires around filler to the core
Nominal voltage, cable	300 V
Minimum bending radius, fixed installation	8 x D
Smallest bending radius, fixed installation	53 mm
Flame resistance	FT4
Special properties	UL ITC/PLTC 105 °C
	CSA AWM I/II A/B FT4 105 °C / 300 V
Ambient temperature (operation)	-30 °C ... 105 °C (cable, fixed installation)

Environmental and real-life conditions

Ambient conditions

Degree of protection	IP68
Ambient temperature (operation) (male connector/female connector)	-20 °C ... 105 °C (Plug / socket)
Ambient temperature (operation)	-20 °C ... 105 °C (Plug / socket)

Ambient temperature (operation) (Cable, fixed installation)	-40 °C ... 105 °C (cable, fixed installation)
Ambient temperature (operation) (Cable, flexible installation)	-30 °C ... 105 °C (Cable, flexible installation)

Drawings

Dimensional drawing

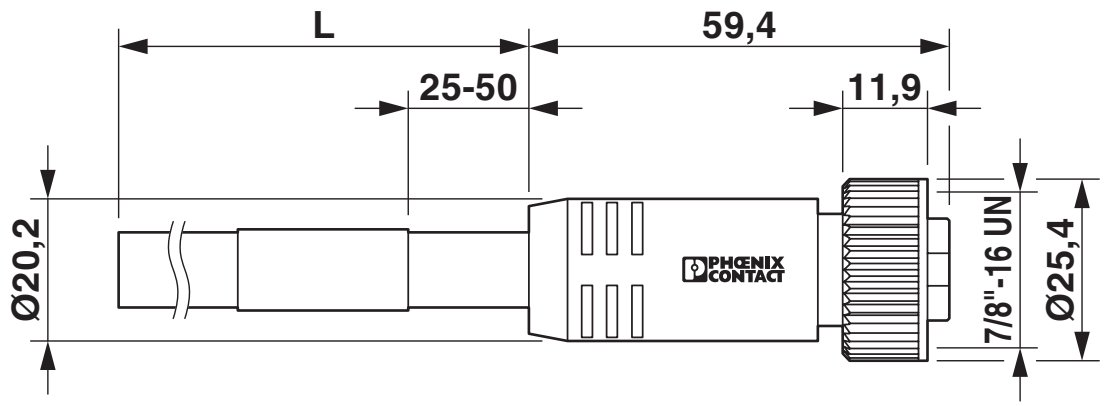

7/8"-16UNF socket, straight

Schematic diagram

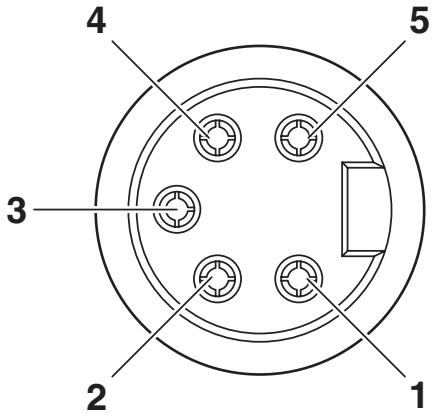

Pin assignment, socket, 7/8"-16UNF, 5-pos., view of female side

Circuit diagram

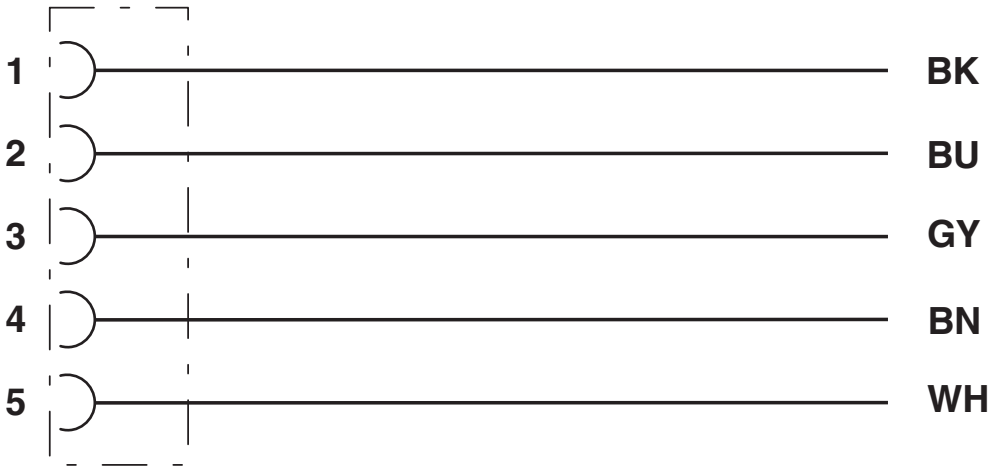

Contact assignment of 7/8" socket

Approvals

To download certificates, visit the product detail page: https://www.phoenixcontact.com/us/products/1416632

UL Listed
Approval ID: FILE E 221474

cUL Listed
Approval ID: FILE E 221474

Classifications

ECLASS

ECLASS-13.0	27060311
ECLASS-15.0	27060311

ETIM

ETIM 10.0	EC001855

UNSPSC

UNSPSC 21.0	31251501

Environmental product compliance

EU RoHS

Fulfills EU RoHS substance requirements	Yes, No exemptions

China RoHS

Environment friendly use period (EFUP)	EFUP-E
	No hazardous substances above the limits

EU REACH SVHC

REACH candidate substance (CAS No.)	No substance above 0.1 wt%

EF3.1 Climate Change

CO2e kg	8.804 kg CO2e

Phoenix Contact 2026 © - all rights reserved
https://www.phoenixcontact.com

Phoenix Contact USA
586 Fulling Mill Road
Middletown, PA 17057, United States
(+717) 944-1300
info@phoenixcon.com