EO-E/UT/SH - Socket

0804016

https://www.phoenixcontact.com/us/products/0804016

Please be informed that the data shown in this PDF document is generated from our online catalog. Please find the complete data in the user documentation. Our general terms of use for downloads are valid.



Socket, with extended touch protection/shutter, Pin connector pattern type E, connection method: Screw connection, color: gray, nom. voltage: 250 V AC (50 Hz), nominal current: 16 A, for mounting on a DIN rail in the service interface or direct mounting, standards/specifications: NF C61-314, IEC 60884-1, Country marking: France

Commercial data

Item number	0804016
Packing unit	5 pc
Minimum order quantity	5 pc
Sales key	BE76
Product key	BE7612
GTIN	4055626225586
Weight per piece (including packing)	78.04 g
Weight per piece (excluding packing)	78.04 g
Customs tariff number	85366990
Country of origin	PL

Technical data

Notes

General

Note	The nominal current does not apply for fuse versions. In this case, the current is determined by the fuse.

Product properties

Product type	Socket
Country ID	France

Connection data

Connection method	Screw connection
Screw thread	M3
Tightening torque	0.5 ... 0.6 Nm
Stripping length	8 mm
Internal cylindrical gage	A3
	B3
Conductor cross-section rigid	0.2 mm² ... 4 mm²
Cross section AWG	24 ... 12 (converted acc. to IEC)
Conductor cross-section flexible	0.25 mm² ... 2.5 mm²
Conductor cross-section, flexible [AWG]	24 ... 14 (converted acc. to IEC)
Conductor cross-section flexible (ferrule without plastic sleeve)	0.25 mm² ... 2.5 mm²
Flexible conductor cross-section (ferrule with plastic sleeve)	0.25 mm² ... 2.5 mm²
Conductor cross-section flexible (2 conductors with the same cross-section, with TWIN ferrule and plastic sleeve)	0.2 mm² ... 4 mm²
Nominal current	16 A
Nominal voltage	250 V AC (50 Hz)

Signaling

Status display	no

Dimensions

Dimensional drawing	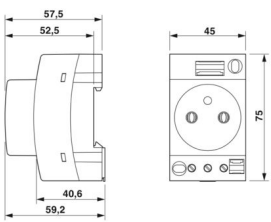
Width	45 mm
Height	75 mm
Depth	59.2 mm
Depth on NS 35/7,5	60 mm

Depth on NS 35/15	67.5 mm
Hole diameter	4.4 mm

Material specifications

Color	gray (RAL 7042)
Flammability rating according to UL 94	V0
Insulating material	PA
Contact material	CuZn38
Static insulating material application in cold	-60 °C
Relative insulation material temperature index (Elec., UL 746 B)	130 °C
Fire protection for rail vehicles (DIN EN 45545-2) R22	HL 1 - HL 3
Fire protection for rail vehicles (DIN EN 45545-2) R23	HL 1 - HL 3
Fire protection for rail vehicles (DIN EN 45545-2) R24	HL 1 - HL 3
Fire protection for rail vehicles (DIN EN 45545-2) R26	HL 1 - HL 3
Surface flammability NFPA 130 (ASTM E 162)	passed
Specific optical density of smoke NFPA 130 (ASTM E 662)	passed
Smoke gas toxicity NFPA 130 (SMP 800C)	passed

Connector

Type of plug	Pin connector pattern type E

Environmental and real-life conditions

Oscillation/broadband noise

Specification	DIN EN 50155 (VDE 0115-200):2022-06
Spectrum	Long life test category 2, bogie-mounted
Frequency	f_1 = 5 Hz to f_2 = 250 Hz
ASD level	6.12 $(m/s^2)^2/Hz$
Acceleration	3.12g
Test duration per axis	5 h
Test directions	X-, Y- and Z-axis
Result	Test passed

Shocks

Specification	DIN EN 50155 (VDE 0115-200):2022-06
Pulse shape	Half-sine
Acceleration	30g
Shock duration	18 ms
Number of shocks per direction	3
Test directions	X-, Y- and Z-axis (pos. and neg.)
Result	Test passed

Ambient conditions

Degree of protection	IP20
Ambient temperature (operation)	-5 °C ... 40 °C (according to IEC 60884-1, average value over a period of 24 hours not above +35°C)

Ambient temperature (storage/transport)	-25 °C ... 60 °C (for a short time, not exceeding 24 h, -60 °C to +70 °C)
Permissible humidity (storage/transport)	30 % ... 70 %
Resistance against air humidity	95 % ... 48 h

Standards and regulations

Standards

Standards/regulations	NF C61-314
	IEC 60884-1

Mounting

Mounting type	for mounting on a DIN rail in the service interface or direct mounting

Drawings

Dimensional drawing

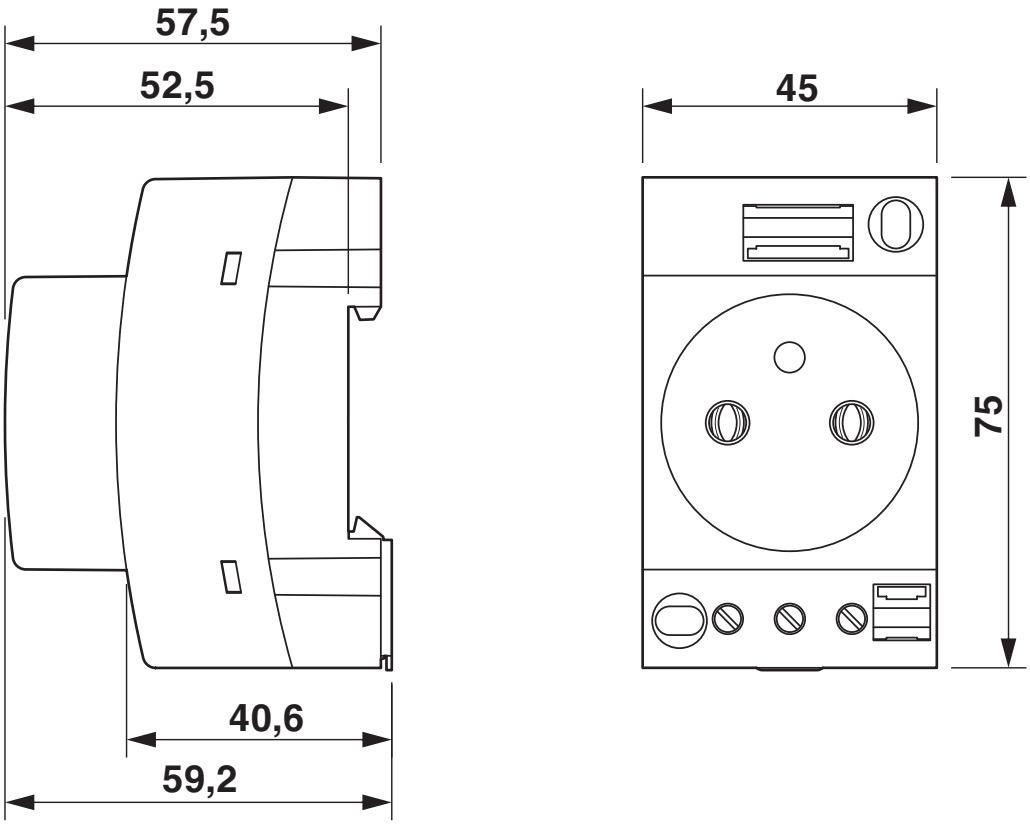

Circuit diagram

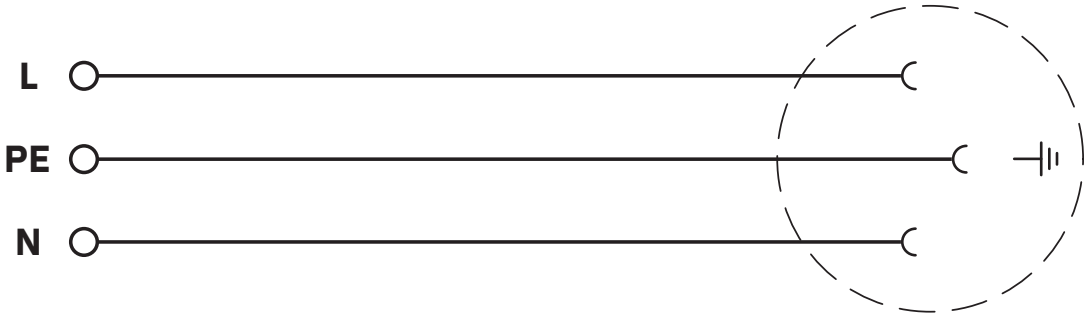

Approvals

To download certificates, visit the product detail page: https://www.phoenixcontact.com/us/products/0804016

VDE Zeichengenehmigung
Approval ID: 40048943

	Nominal voltage U_N	Nominal current I_N	Cross section AWG	Cross section mm^2
keine				
	250 V	16 A	-	-

EAC-RoHS
Approval ID: RU D-DE.HB49.B.00025

EAC
Approval ID: KZ7500651131219505

Classifications

ECLASS

ECLASS-13.0	27142305
ECLASS-15.0	27142305

ETIM

ETIM 10.0	EC001663

UNSPSC

UNSPSC 21.0	39121400

Environmental product compliance

EU RoHS

Fulfills EU RoHS substance requirements	Yes, No exemptions

China RoHS

Environment friendly use period (EFUP)	EFUP-E
	No hazardous substances above the limits

EU REACH SVHC

REACH candidate substance (CAS No.)	No substance above 0.1 wt%

EF3.1 Climate Change

CO2e kg	0.5 kg CO2e

Phoenix Contact 2026 © - all rights reserved
https://www.phoenixcontact.com

Phoenix Contact USA
586 Fulling Mill Road
Middletown, PA 17057, United States
(+717) 944-1300
info@phoenixcon.com