ABN 2/SS - Support bracket

0404460

https://www.phoenixcontact.com/us/products/0404460

Please be informed that the data shown in this PDF document is generated from our online catalog. Please find the complete data in the user documentation. Our general terms of use for downloads are valid.



Double support bracket, insulating material, optionally for use with 3 x 10 mm or 6 x 6 mm busbar, height in closed state: 39 mm

Commercial data

Item number	0404460
Packing unit	10 pc
Minimum order quantity	10 pc
Sales key	BE07
Product key	BE7113
GTIN	4017918001902
Weight per piece (including packing)	5.4 g
Weight per piece (excluding packing)	5.32 g
Customs tariff number	39269097
Country of origin	PL

Technical data

Product properties

Product type	Support bracket
Number of positions	2.00

Electrical properties

Nominal current I_N	0 A

Dimensions

Dimensional drawing	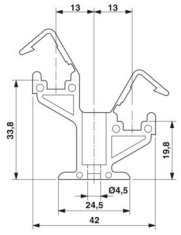
Width	10 mm
Height	47 mm
Depth	39 mm
Length	47 mm
Diameter	4.5 mm

Material specifications

Color	gray (RAL 7042)
Material	PA
Flammability rating according to UL 94	V0
Temperature index of insulation material (DIN EN 60216-1 (VDE 0304-21))	125 °C
Relative insulation material temperature index (Elec., UL 746 B)	125 °C
Calorimetric heat release NFPA 130 (ASTM E 1354)	27,5 MJ/kg
Surface flammability NFPA 130 (ASTM E 162)	passed
Specific optical density of smoke NFPA 130 (ASTM E 662)	passed
Smoke gas toxicity NFPA 130 (SMP 800C)	passed
Components	free from silicone and halogen

Environmental and real-life conditions

Ambient conditions

Ambient temperature (operation)	-60 °C ... 105 °C (max. short-term operating temperature RTI Elec.)
Ambient temperature (storage/transport)	-25 °C ... 60 °C (for a short time, not exceeding 24 h, -60 °C to +70 °C)
Ambient temperature (assembly)	-5 °C ... 70 °C

Ambient temperature (actuation)	-5 °C ... 70 °C
Permissible humidity (storage/transport)	30 % ... 70 %

Mounting

Mounting type	Direct mounting

Drawings

Dimensional drawing

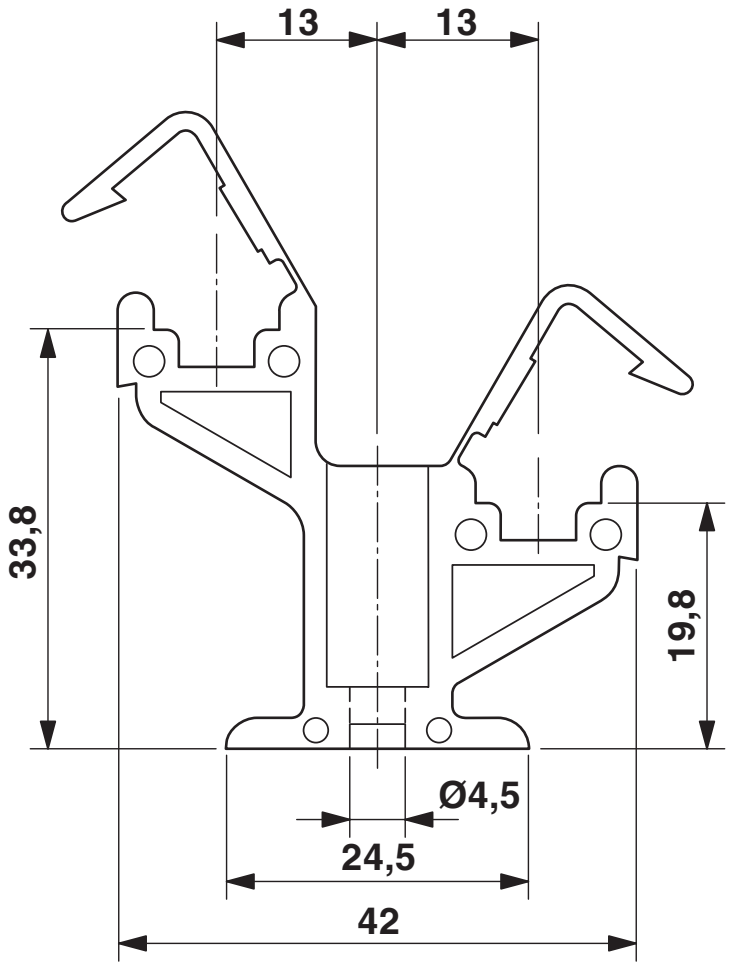

Classifications

ECLASS

ECLASS-13.0	27400607
ECLASS-15.0	27400607

ETIM

ETIM 10.0	EC001166

UNSPSC

UNSPSC 21.0	39121700

Environmental product compliance

EU RoHS

Fulfills EU RoHS substance requirements	Yes, No exemptions

China RoHS

Environment friendly use period (EFUP)	EFUP-E
	No hazardous substances above the limits

EU REACH SVHC

REACH candidate substance (CAS No.)	No substance above 0.1 wt%

EF3.1 Climate Change

CO2e kg	0.034 kg CO2e

Phoenix Contact 2026 © - all rights reserved
https://www.phoenixcontact.com

Phoenix Contact USA
586 Fulling Mill Road
Middletown, PA 17057, United States
(+717) 944-1300
info@phoenixcon.com