QPD CW4X2,5/2X6-10 GY - Conductor connector

1424034

https://www.phoenixcontact.com/pc/products/1424034

Please be informed that the data shown in this PDF document is generated from our online catalog. Please find the complete data in the user documentation. Our general terms of use for downloads are valid.



Conductor connector, connection method: IDC connection/ IDC connection, 1 mm^2 ... 2.5 mm^2, 690 V, 20 A, PA, gray, With two QUICKON nuts, coding: Coding profile, external cable diameter: 6 mm ... 10 mm

Your advantages

- Innovative and time saving - QUICKON fast connection for time saving of up to 80 % for on-site connection
- Robust throughout: housing with IP68/IP69K and IK07 protection for a wide range of applications
- Safer connection with mechanical coding to protect against mismatching, and touch-proof protection in accordance with DIN EN 0105
- Easy and safe - with the cable connector, you can repair or extend cables quickly, in combination with the connector as well as the coupling connection

Commercial data

Item number	1424034
Packing unit	1 pc
Minimum order quantity	1 pc
Product key	AF6CBB
GTIN	4055626366364
Weight per piece (including packing)	22.22 g
Weight per piece (excluding packing)	22.22 g
Customs tariff number	85366990
Country of origin	PL

Technical data

Product properties

Product type	Cable connector
Product family	QPD
Type	QPD 4x2,5
Number of positions	4
Position marking	1, 2, 3, 4
Number of connections per position	1
Coding	Coding profile

Insulation characteristics

Overvoltage category	III
Degree of pollution	3

Dimensions

Dimensional drawing	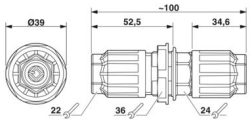
Width	39 mm
Height	39 mm
Length	100 mm
Diameter	39 mm

Connection data

Connection technology

Frequency of connections between conductors of the same cross section	max. 10

Conductor connection

Tightening torque	10 Nm
Tightening torque Union nut	10 Nm

Electrical properties

Rated surge voltage (II/2)	6 kV
Rated surge voltage (III/2)	6 kV
Rated surge voltage (III/3)	6 kV
Rated current	20 A
Contact resistance	< 3 mΩ
rated voltage (II/2)	1000 V
rated voltage (III/2)	690 V
Rated voltage (III/3)	690 V
Nominal voltage U_N	690 V AC

	690 V DC
Nominal current I_N	20 A

Mechanical properties

Mechanical data

Insertion/withdrawal cycles	max. 50

Material specifications

Material Housing	PA
Material Contact	Cu
Material Contact surface	silver-plated
Flammability rating according to UL 94	V0
Material wire insulation	PVC/PE/TPE/rubber

Cable/line

Structure of individual litz in acc. with VDE 0295 / smallest wire diameter	VDE 0295 class 1 to 6/min. 0.15 mm
External cable diameter	6 mm ... 10 mm
Wire diameter including insulation	2 mm ... 3.8 mm
Position marking	1, 2, 3, 4
Material wire insulation	PVC/PE/TPE/rubber
Halogen-free	yes

Environmental and real-life conditions

Ambient conditions

Degree of protection	IP66
	IP68 (2 m / 24 h)
	IP69K
Impact strength	IK07
Ambient temperature (operation)	-40 °C ... 100 °C
Temperature when conductor connected	-5 °C ... 50 °C
Ambient temperature (storage/transport)	-40 °C ... 100 °C

Drawings

Dimensional drawing

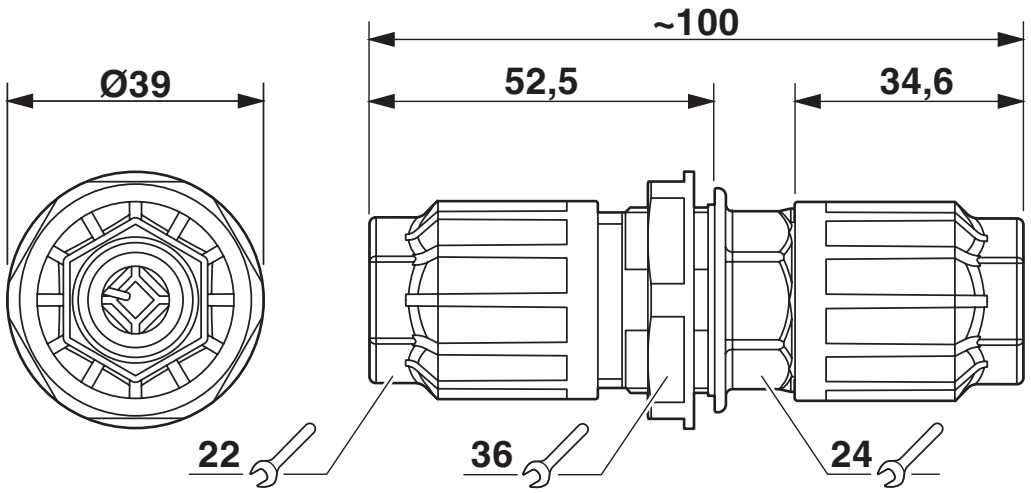

Dimensional drawing

Diagram

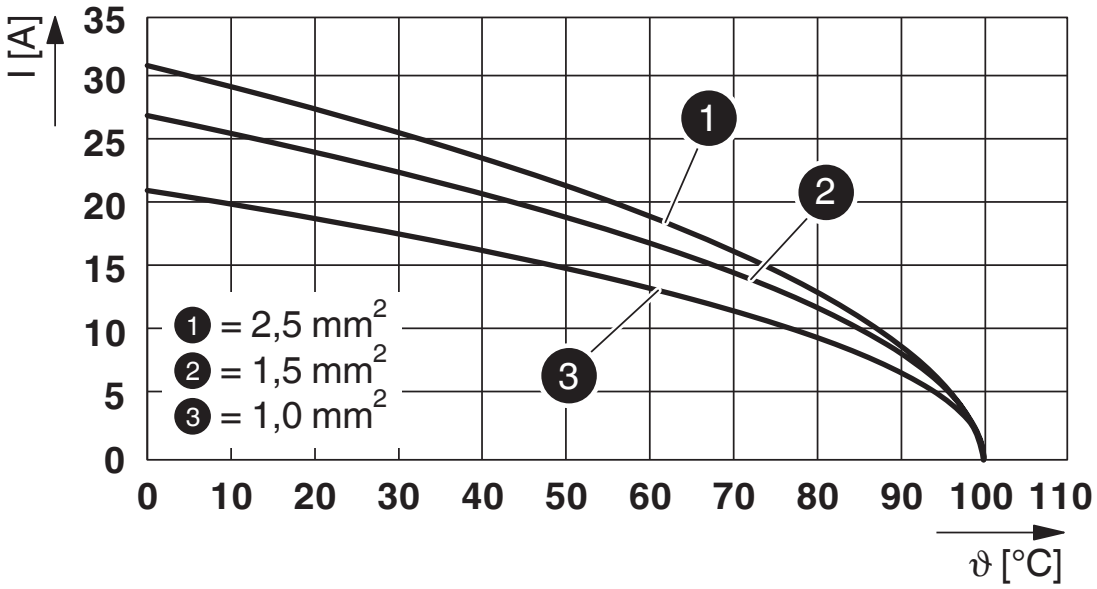

Derating diagram

Classifications

ECLASS

ECLASS-13.0	27440605
ECLASS-15.0	27440605

UNSPSC

UNSPSC 21.0	39121402

Environmental product compliance

EU RoHS

Fulfills EU RoHS substance requirements	Yes, No exemptions

China RoHS

Environment friendly use period (EFUP)	EFUP-E
	No hazardous substances above the limits

EU REACH SVHC

REACH candidate substance (CAS No.)	No substance above 0.1 wt%

Phoenix Contact 2026 © - all rights reserved
https://www.phoenixcontact.com

PHOENIX CONTACT GmbH & Co. KG
Flachsmarktstraße 8
D-32825 Blomberg
+49 (0) 5235-3 00
info@phoenixcontact.com