PLC-OSC- 24DC/ 48DC/100/C1D2 - Optocoupler

5603261

https://www.phoenixcontact.com/gb/products/5603261

Please be informed that the data shown in this PDF document is generated from our online catalog. Please find the complete data in the user documentation. Our general terms of use for downloads are valid.



PLC-INTERFACE, consisting of DIN rail-mountable basic terminal block with screw connection and plug-in miniature solid-state relay, input: 24 V DC, output: 3 - 48 V DC/100 mA, UL/cUL: approved for use in Ex Zone Class I, Div. 2

Commercial data

Item number	5603261
Packing unit	10 pc
Minimum order quantity	10 pc
Sales key	DK622K
Product key	DK622K
GTIN	4046356687379
Weight per piece (including packing)	37.63 g
Weight per piece (excluding packing)	37 g
Customs tariff number	85364190
Country of origin	DE

Technical data

Notes

Utilization restriction

EMC note	EMC: class A product, see manufacturer's declaration in the download area

Product properties

Product type	Solid-state relay module
Product family	PLC-INTERFACE
Application	Class I, Division 2
	potentially explosive areas
Operating mode	100% operating factor

Insulation characteristics: Standards/regulations

Insulation	Basic insulation
Overvoltage category	III
Pollution degree	2

Data management status

Date of last data management	24.11.2026

Electrical properties

Maximum power dissipation for nominal condition	0.2 W
Test voltage (Input/output)	2.5 kV (50 Hz, 1 min., input/output)

Input data

Nominal input voltage U_N	24 V DC
Nominal voltage (plugged-in solid-state relay)	24 V DC
Input voltage range in reference to U_N	0.8 ... 1.2
Input voltage range	19.2 V DC ... 28.8 V DC
Switching threshold "0" signal in reference to U_N	≤ 0.4
Switching threshold "1" signal in reference to U_N	≥ 0.8
Typical input current at U_N	8.5 mA
Typical response time	20 µs (at U_N)
Typical turn-off time	300 µs (at U_N)
Operating voltage display	Yellow LED
Protective circuit	Reverse polarity protection; Polarity protection diode
	Freewheeling diode; Freewheeling diode
Transmission frequency	300 Hz

Output data

Contact switching type	1 N/O contact
Design of digital output	electronic

Output voltage range	3 V DC ... 48 V DC
Limiting continuous current	100 mA
Voltage drop at max. limiting continuous current	≤ 1 V
Output circuit	2-conductor, floating
Protective circuit	Reverse polarity protection; Polarity protection diode
	Surge protection

Connection data

Connection method	Screw connection
Stripping length	8 mm
Screw thread	M3
Conductor cross-section rigid	0.14 mm² ... 2.5 mm²
Conductor cross-section flexible	0.14 mm² ... 2.5 mm²
	0.2 mm² ... 2.5 mm² (Single ferrule)
	2x 0.5 mm² ... 1.5 mm² (TWIN ferrule)
Conductor cross-section AWG	26 ... 14
Tightening torque	0.6 Nm ... 0.8 Nm

Dimensions

Item dimensions

Width	6.2 mm
Height	80 mm
Depth	94 mm

Material specifications

Color	gray (RAL 7042)
Flammability rating according to UL 94 (Housing)	V0 (Housing)

Environmental and real-life conditions

Ambient conditions

Ambient temperature (operation)	-20 °C ... 60 °C
Ambient temperature (storage/transport)	-40 °C ... 85 °C

Approvals

CE

Certificate	CE-compliant

UL, USA

Identification	Class I, Zone 2, AEx nA nC IIC T6

UL, USA/Canada

Identification	Class I, Div. 2, Groups A, B, C, D

UL, Canada

Identification	Class I, Zone 2, Ex nA nC IIC Gc T6 X

Corrosive gas test

Identification	ISA-S71.04. G3 Harsh Group
	EN 60068-2-60

Standards and regulations

Standards/regulations

Standards/regulations	IEC 60947-5-1

Mounting

Mounting type	DIN rail mounting
Assembly note	in rows with zero spacing
Mounting position	any

Drawings

Circuit diagram

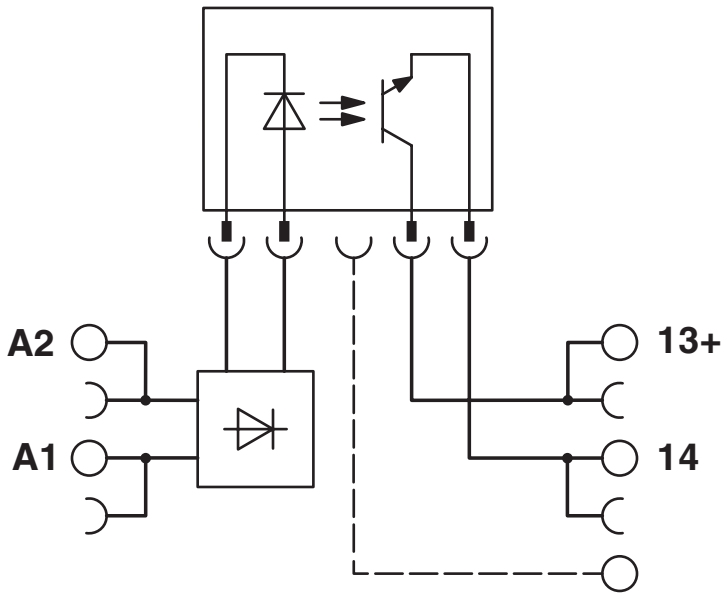

Approvals

To download certificates, visit the product detail page: https://www.phoenixcontact.com/gb/products/5603261

EAC
Approval ID: RU C-DE.A*30.B.01082

cULus Listed
Approval ID: E140324

cULus Listed
Approval ID: E140324

cULus Listed
Approval ID: E140324

cUL Listed
Approval ID: E199827

UL Listed
Approval ID: E199827

cULus Listed
Approval ID: E199827

Classifications

ECLASS

ECLASS-13.0	27371604
ECLASS-15.0	27371604

ETIM

ETIM 10.0	EC001504

UNSPSC

UNSPSC 21.0	39122300

Environmental product compliance

EU RoHS

Fulfills EU RoHS substance requirements	Yes
Exemption	7(a), 7(c)-I

China RoHS

Environment friendly use period (EFUP)	EFUP-50
	An article-related China RoHS declaration table can be found in the download area for the respective article under "Manufacturer declaration". For all articles with EFUP-E, no China RoHS declaration table issued and required.

EU REACH SVHC

REACH candidate substance (CAS No.)	Hexahydromethylphthalic anhydride(CAS: n/a)
	Lead(CAS: 7439-92-1)
SCIP	1b9e08df-e3b8-44c4-be5b-7861431e0697

EF3.1 Climate Change

CO2e kg	0.652 kg CO2e

Phoenix Contact 2026 © - all rights reserved
https://www.phoenixcontact.com

PHOENIX CONTACT Ltd
Halesfield 13, Telford
Shropshire, TF7 4PG
01952 681700
info@phoenixcontact.co.uk