PTFIX-F - Flange

3274060

https://www.phoenixcontact.com/gb/products/3274060

Please be informed that the data shown in this PDF document is generated from our online catalog. Please find the complete data in the user documentation. Our general terms of use for downloads are valid.



Flange, With screw fixing, for direct mounting of the 2.5 mm^2 and 4 mm^2 FIX blocks, depth: 21.7 mm, width: 8.6 mm, height: 28.6 mm, color: gray, mounting type: Screw mounting

Your advantages

- Easy marking options

Commercial data

Item number	3274060
Packing unit	20 pc
Minimum order quantity	20 pc
Sales key	BEAZ11
Product key	BEAZ11
GTIN	4055626394152
Weight per piece (including packing)	3 g
Weight per piece (excluding packing)	1.72 g
Customs tariff number	85389099
Country of origin	PL

Technical data

Product properties

Product type	Mounting material

Connection data

Tightening torque	0.3 Nm

Dimensions

Dimensional drawing	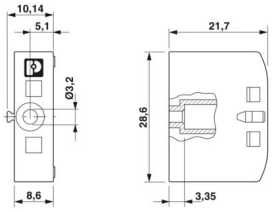
Width	8.6 mm
Height	28.6 mm
Depth	21.7 mm
Hole diameter	5.8 mm

Material specifications

Color	gray (RAL 7042)
Material	PA
Flammability rating according to UL 94	V0

Environmental and real-life conditions

Ambient conditions

Ambient temperature (operation)	-60 °C ... 105 °C (max. short-term operating temperature RTI Elec.)
Ambient temperature (storage/transport)	-25 °C ... 60 °C (for a short time, not exceeding 24 h, -60 °C to +70 °C)
Ambient temperature (assembly)	-5 °C ... 70 °C
Ambient temperature (actuation)	-5 °C ... 70 °C
Permissible humidity (storage/transport)	30 % ... 70 %

Mounting

Mounting type	Screw mounting

Drawings

Dimensional drawing

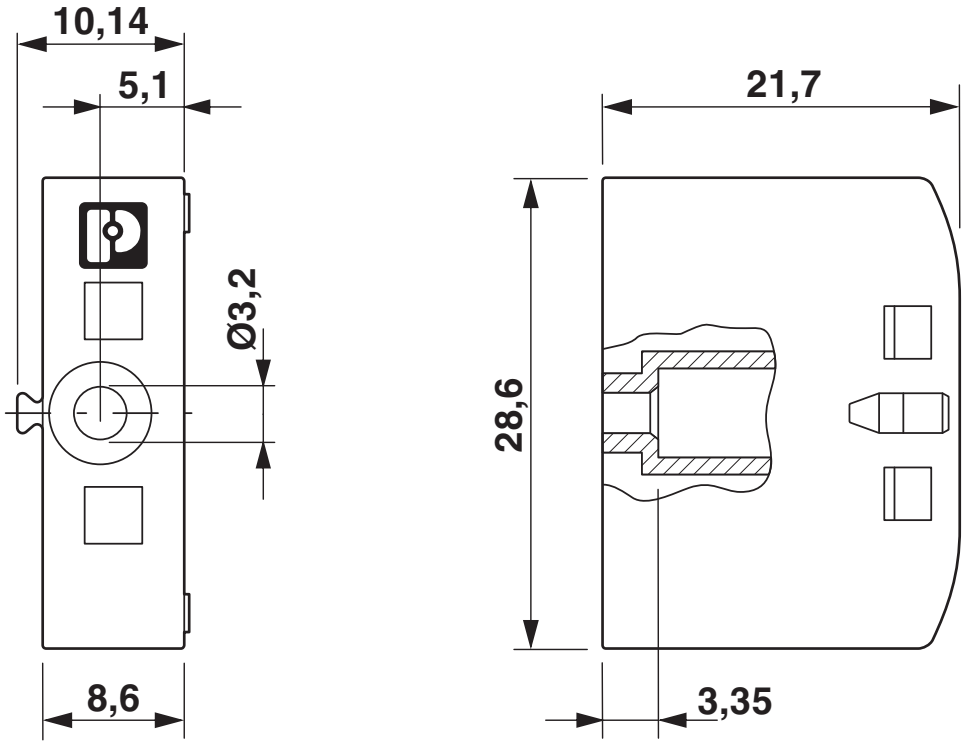

Approvals

To download certificates, visit the product detail page: https://www.phoenixcontact.com/gb/products/3274060

EAC
Approval ID: KZ7500651131219505

Classifications

ECLASS

ECLASS-13.0	27250302
ECLASS-15.0	27250302

ETIM

ETIM 10.0	EC001041

UNSPSC

UNSPSC 21.0	39121400

Environmental product compliance

EU RoHS

Fulfills EU RoHS substance requirements	Yes, No exemptions

China RoHS

Environment friendly use period (EFUP)	EFUP-E
	No hazardous substances above the limits

EU REACH SVHC

REACH candidate substance (CAS No.)	No substance above 0.1 wt%

EF3.1 Climate Change

CO2e kg	0.017 kg CO2e

Phoenix Contact 2026 © - all rights reserved
https://www.phoenixcontact.com

PHOENIX CONTACT Ltd
Halesfield 13, Telford
Shropshire, TF7 4PG
01952 681700
info@phoenixcontact.co.uk