PTPOWER 95-PE - Protective conductor terminal block

3260106

https://www.phoenixcontact.com/gb/products/3260106

Please be informed that the data shown in this PDF document is generated from our online catalog. Please find the complete data in the user documentation. Our general terms of use for downloads are valid.





Protective conductor terminal block, number of connections: 2, number of positions: 1, connection method: PowerTurn connection, Rated cross section: 95 mm^2, cross section: 25 mm^2 - 95 mm^2, mounting type: 2.3 mm copper DIN rail, color: green-yellow

Your advantages

- Time-saving conductor connection thanks to tool-free direct-connection technology
- Vibration-resistant and maintenance-free conductor connection
- Full flexibility thanks to the standardized CLIPLINE complete bridging, marking, and testing accessories
- Meet the requirements of DIN EN 60947-7-2 or IEC 60947-7-2 for protective conductor connections
- High level of safety thanks to the low-resistance connection to the ground potential via the top-hat rail
- Direct contacting with the DIN rail enables fast, error-free grounding without additional wiring effort.

Commercial data

Item number	3260106
Packing unit	3 pc
Minimum order quantity	3 pc
Sales key	BE2221
Product key	BE2221
GTIN	4046356778749
Weight per piece (including packing)	328 g
Weight per piece (excluding packing)	302 g
Customs tariff number	85369010
Country of origin	TR

Technical data

Product properties

Product type	Ground terminal block
Area of application	Railway industry
	Machine building
	Plant engineering
Number of positions	1
Number of connections	2
Number of rows	1
Potentials	1

Insulation characteristics

Overvoltage category	III
Degree of pollution	3

Electrical properties

Rated surge voltage	8 kV

Connection data

Grounding foot	Yes
Number of connections per level	2
Nominal cross section	95 mm²
Connection method	PowerTurn connection
Note	May only be mounted on 2.3 mm copper DIN rails
Stripping length	40 mm
Connection in acc. with standard	IEC 60947-7-2
Conductor cross-section rigid	25 mm² ... 95 mm²
Cross section AWG	2 ... 3/0 (converted acc. to IEC)
Conductor cross-section flexible	25 mm² ... 95 mm²
Conductor cross-section, flexible [AWG]	2 ... 3/0 (converted acc. to IEC)
Conductor cross-section flexible (ferrule without plastic sleeve)	25 mm² ... 95 mm²
Flexible conductor cross-section (ferrule with plastic sleeve)	25 mm² ... 95 mm²
Cross-section with insertion bridge, rigid	70 mm²
Cross-section with insertion bridge, flexible	70 mm²
Nominal cross section	95 mm²

Connection cross sections directly pluggable

Conductor cross-section rigid	25 mm² ... 95 mm²
Conductor cross-section flexible (ferrule without plastic sleeve)	25 mm² ... 95 mm²
Flexible conductor cross-section (ferrule with plastic sleeve)	25 mm² ... 95 mm²

Ex data

Rated data (ATEX/IECEx)

Identification	II 2 GD Ex eb IIC Gb
Operating temperature range	-60 °C ... 110 °C
Ex-certified accessories	1206612 SZF 3-1,0X5,5
	1201662 E/AL-NS 35
output	(Permanent)

Ex connection data General

Ferrule length	40 mm
Stripping length	40 mm
Nominal cross section	95 mm²
Rated cross section AWG	4/0
Connection capacity rigid	25 mm² ... 95 mm²
Connection capacity AWG	4 ... 4/0
Conductor cross-section flexible, with ferrule without plastic sleeve min.	25 mm²
Conductor cross-section flexible, with ferrule without plastic sleeve max.	95 mm²
Single conductor/terminal point, flexible, with ferrule, without plastic sleeve, AWG	4 ... 4/0

Dimensions

Width	25 mm
Height	105.5 mm
Depth on NS 35/15	108.7 mm

Material specifications

Color	green-yellow
Flammability rating according to UL 94	V0
Insulating material group	I
Insulating material	PA
Static insulating material application in cold	-60 °C
Temperature index of insulation material (DIN EN 60216-1 (VDE 0304-21))	125 °C
Relative insulation material temperature index (Elec., UL 746 B)	130 °C
Fire protection for rail vehicles (DIN EN 45545-2) R22	HL 1 - HL 3
Fire protection for rail vehicles (DIN EN 45545-2) R23	HL 1 - HL 3
Fire protection for rail vehicles (DIN EN 45545-2) R24	HL 1 - HL 3
Fire protection for rail vehicles (DIN EN 45545-2) R26	HL 1 - HL 3
Calorimetric heat release NFPA 130 (ASTM E 1354)	27,5 MJ/kg
Surface flammability NFPA 130 (ASTM E 162)	passed
Specific optical density of smoke NFPA 130 (ASTM E 662)	passed
Smoke gas toxicity NFPA 130 (SMP 800C)	passed

Mechanical properties

Mechanical data

Open side panel	No

Environmental and real-life conditions

Oscillation/broadband noise

Specification	DIN EN 50155 (VDE 0115-200):2008-03
Spectrum	Long life test category 2, bogie-mounted
Frequency	f_1 = 5 Hz to f_2 = 250 Hz
ASD level	6.12 (m/s²)²/Hz
Acceleration	3.12g
Test duration per axis	5 h
Test directions	X-, Y- and Z-axis
Result	Test passed

Shocks

Specification	DIN EN 50155 (VDE 0115-200):2008-03
Pulse shape	Half-sine
Acceleration	30g
Shock duration	18 ms
Number of shocks per direction	3
Test directions	X-, Y- and Z-axis (pos. and neg.)
Result	Test passed

Ambient conditions

Ambient temperature (operation)	-60 °C ... 110 °C (Operating temperature range incl. self-heating; for max. short-term operating temperature, see RTI Elec.)
Ambient temperature (storage/transport)	-25 °C ... 60 °C (for a short time, not exceeding 24 h, -60 °C to +70 °C)
Ambient temperature (assembly)	-5 °C ... 70 °C
Ambient temperature (actuation)	-5 °C ... 70 °C
Permissible humidity (operation)	20 % ... 90 %
Permissible humidity (storage/transport)	30 % ... 70 %

Standards and regulations

Connection in acc. with standard	IEC 60947-7-2

Mounting

Mounting type	2.3 mm copper DIN rail

Drawings

Schematic diagram

PTPOWER



AGK 10-PTPOWER	**0,5 mm² ... 16 mm²**	**18 mm**
PTPOWER 35	**2,5 mm² ... 35 mm²**	**25 mm**
PTPOWER 50	**10 mm² ... 50 mm²**	**32 mm**
PTPOWER 95	**25 mm² ... 95 mm²**	**40 mm**
PTPOWER 185	**95 mm² ... 185 mm²**	**40 mm**

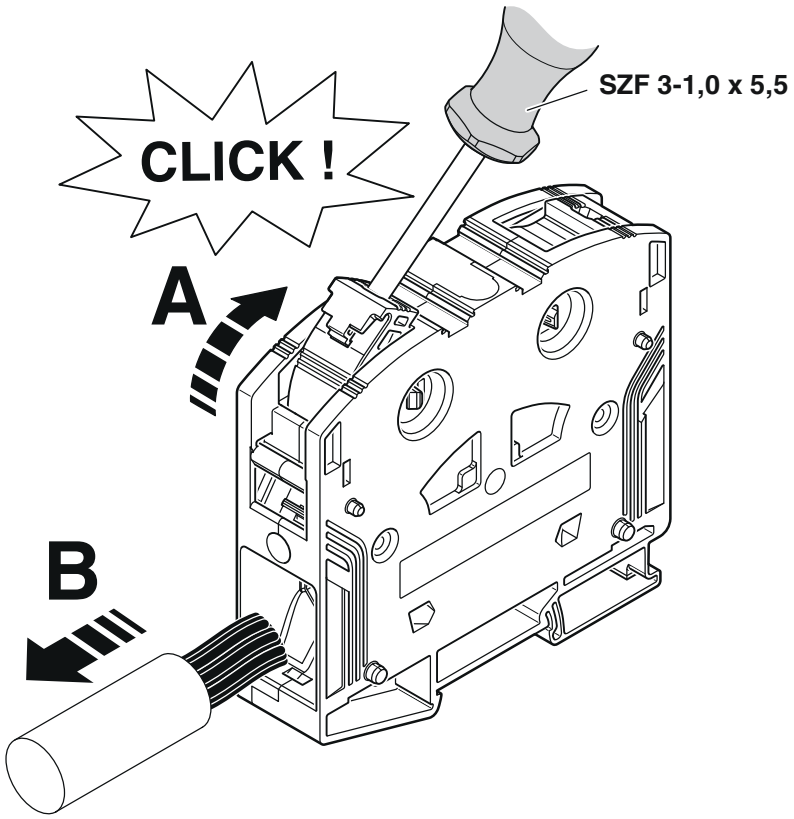

Circuit diagram

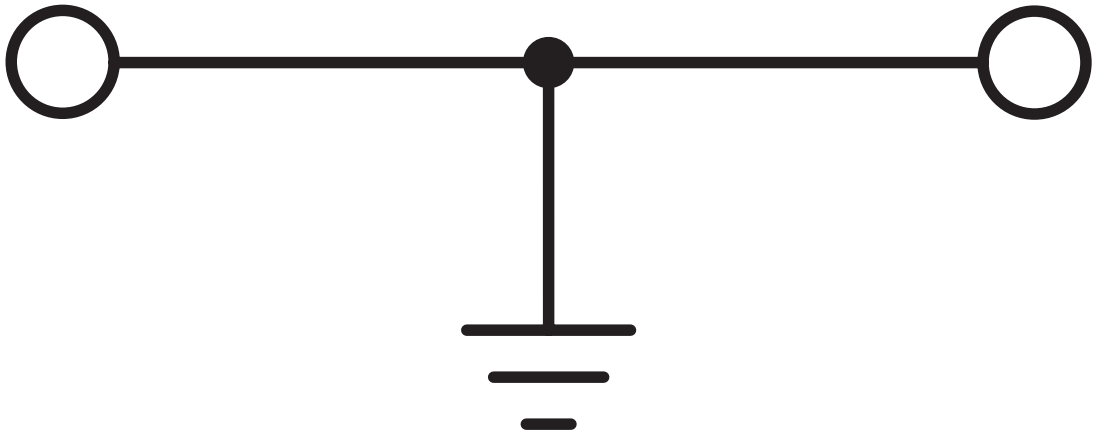

Approvals

To download certificates, visit the product detail page: https://www.phoenixcontact.com/gb/products/3260106

CSA
Approval ID: 13631

	Nominal voltage U_N	Nominal current I_N	Cross section AWG	Cross section mm^2
B				
	-	-	4 - 4/0	-
C				
	-	-	4 - 4/0	-

EAC
Approval ID: RU C-DE.BL08.B.00644

DNV
Approval ID: TAE00000Z9

cUL Recognized
Approval ID: E60425

	Nominal voltage U_N	Nominal current I_N	Cross section AWG	Cross section mm^2
C				
	-	-	4 - 4/0	-

UL Recognized
Approval ID: E60425

	Nominal voltage U_N	Nominal current I_N	Cross section AWG	Cross section mm^2
E				
	-	-	4 - 4/0	-

CCC
Approval ID: 2020322313000630

UKCA-EX
Approval ID: CML 22UKEX1227U

IECEx
Approval ID: IECExSEV14.0013U

ATEX
Approval ID: SEV14ATEX0156U

	Nominal voltage U_N	Nominal current I_N	Cross section AWG	Cross section mm^2
keine				
	-	-	-	25 - 95

IECEx
Approval ID: IECExSEV14.0013U

EAC Ex
Approval ID: KZ 7500525010101950

Classifications

ECLASS

ECLASS-13.0	27250103
ECLASS-15.0	27250103

ETIM

ETIM 10.0	EC000901

UNSPSC

UNSPSC 21.0	39121400

Environmental product compliance

EU RoHS

Fulfills EU RoHS substance requirements	Yes, No exemptions

China RoHS

Environment friendly use period (EFUP)	EFUP-E
	No hazardous substances above the limits

EU REACH SVHC

REACH candidate substance (CAS No.)	No substance above 0.1 wt%

EF3.1 Climate Change

CO2e kg	6.224 kg CO2e

Phoenix Contact 2026 © - all rights reserved
https://www.phoenixcontact.com

PHOENIX CONTACT Ltd
Halesfield 13, Telford
Shropshire, TF7 4PG
01952 681700
info@phoenixcontact.co.uk