PTPOWER 50-PE - Protective conductor terminal block

3260052

https://www.phoenixcontact.com/gb/products/3260052

Please be informed that the data shown in this PDF document is generated from our online catalog. Please find the complete data in the user documentation. Our general terms of use for downloads are valid.





Protective conductor terminal block, number of connections: 2, number of positions: 1, connection method: PowerTurn connection, 1 level, cross section: 10 mm^2 - 70 mm^2, mounting type: NS 35/15, color: green-yellow

Your advantages

- Time-saving conductor connection thanks to tool-free direct-connection technology
- Vibration-resistant and maintenance-free conductor connection
- Full flexibility thanks to the standardized CLIPLINE complete bridging, marking, and testing accessories
- Meet the requirements of DIN EN 60947-7-2 or IEC 60947-7-2 for protective conductor connections
- High level of safety thanks to the low-resistance connection to the ground potential via the top-hat rail
- Direct contacting with the DIN rail enables fast, error-free grounding without additional wiring effort.

Commercial data

Item number	3260052
Packing unit	10 pc
Minimum order quantity	10 pc
Sales key	BE2221
Product key	BE2221
GTIN	4046356998758
Weight per piece (including packing)	201.8 g
Weight per piece (excluding packing)	185.3 g
Customs tariff number	85369010
Country of origin	TR

Technical data

Product properties

Product type	Ground terminal block
Number of positions	1
Number of connections	2
Number of rows	1
Potentials	1

Insulation characteristics

Overvoltage category	III
Degree of pollution	3

Electrical properties

Rated surge voltage	8 kV

Connection data

Grounding foot	Yes
Number of connections per level	2
Nominal cross section	50 mm²
Rated cross section AWG	2/0

1 level

Connection method	PowerTurn connection
Note	Use an appropriate NS 35... copper or aluminum DIN rail for connection cross sections > 35 mm²/2 AWG.
	The maximum short-time withstand current is 50 mm²/6 kA
Stripping length	30 mm ... 32 mm
Internal cylindrical gage	A10
Connection in acc. with standard	IEC 60947-7-2
Conductor cross-section rigid	10 mm² ... 70 mm²
Cross section AWG	6 ... 2/0 (converted acc. to IEC)
Conductor cross-section flexible	10 mm² ... 70 mm²
Conductor cross-section, flexible [AWG]	6 ... 2/0 (converted acc. to IEC)
Conductor cross-section flexible (ferrule without plastic sleeve)	10 mm² ... 50 mm²
Flexible conductor cross-section (ferrule with plastic sleeve)	10 mm² ... 50 mm²
Cross-section with insertion bridge, rigid	10 mm² ... 50 mm²
Cross-section with insertion bridge, flexible	10 mm² ... 50 mm²
Cross-section with insertion bridge, flexible, with ferrule without plastic sleeve	10 mm² (50 mm²)
Cross-section with insertion bridge, flexible, with ferrule with plastic sleeve	10 mm² ... 50 mm²

1 level Connection cross sections directly pluggable

Conductor cross-section rigid	10 mm² ... 70 mm²
Conductor cross-section, rigid [AWG]	8 ... 2/0 (converted acc. to IEC)

Conductor cross-section flexible (ferrule without plastic sleeve)	10 mm² ... 50 mm²
Flexible conductor cross-section (ferrule with plastic sleeve)	10 mm² ... 50 mm²

Ex data

Rated data (ATEX/IECEx)

Identification	Ⓔx II 2 GD Ex eb IIC Gb
Operating temperature range	-60 °C ... 110 °C
Ex-certified accessories	1206612 SZF 3-1,0X5,5
	1201662 E/AL-NS 35
output	(Permanent)

Ex level General

Contact resistance	0.16 mΩ

Ex connection data General

Ferrule length	30 mm ... 32 mm
Stripping length	30 mm
Nominal cross section	50 mm²
Rated cross section AWG	1/0
Connection capacity rigid	10 mm² ... 70 mm²
Connection capacity AWG	8 ... 2/0
Conductor cross-section flexible, with ferrule without plastic sleeve min.	16 mm²
Conductor cross-section flexible, with ferrule without plastic sleeve max.	50 mm²

Dimensions

Width	20 mm
Height	101 mm
Depth on NS 35/15	105 mm

Material specifications

Color	green-yellow
Flammability rating according to UL 94	V0
Insulating material group	I
Insulating material	PA
Static insulating material application in cold	-60 °C
Relative insulation material temperature index (Elec., UL 746 B)	130 °C
Fire protection for rail vehicles (DIN EN 45545-2) R22	HL 1 - HL 3
Fire protection for rail vehicles (DIN EN 45545-2) R23	HL 1 - HL 3
Fire protection for rail vehicles (DIN EN 45545-2) R24	HL 1 - HL 3
Fire protection for rail vehicles (DIN EN 45545-2) R26	HL 1 - HL 3
Surface flammability NFPA 130 (ASTM E 162)	passed
Specific optical density of smoke NFPA 130 (ASTM E 662)	passed
Smoke gas toxicity NFPA 130 (SMP 800C)	passed

Mechanical properties

Mechanical data

Open side panel	No

Environmental and real-life conditions

Shocks

Specification	DIN EN 50155 (VDE 0115-200):2008-03
Pulse shape	Half-sine
Acceleration	30g
Shock duration	18 ms
Number of shocks per direction	3
Test directions	X-, Y- and Z-axis (pos. and neg.)
Result	Test passed

Ambient conditions

Ambient temperature (operation)	-60 °C ... 110 °C (Operating temperature range incl. self-heating; for max. short-term operating temperature, see RTI Elec.)
Ambient temperature (storage/transport)	-25 °C ... 60 °C (for a short time, not exceeding 24 h, -60 °C to +70 °C)
Ambient temperature (assembly)	-5 °C ... 70 °C
Ambient temperature (actuation)	-5 °C ... 70 °C
Permissible humidity (operation)	20 % ... 90 %
Permissible humidity (storage/transport)	30 % ... 70 %

Standards and regulations

Connection in acc. with standard	IEC 60947-7-2

Mounting

Mounting type	NS 35/15

Drawings

Schematic diagram

PTPOWER



AGK 10-PTPOWER	**0,5 mm² ... 16 mm²**	**18 mm**
PTPOWER 35	**2,5 mm² ... 35 mm²**	**25 mm**
PTPOWER 50	**10 mm² ... 50 mm²**	**32 mm**
PTPOWER 95	**25 mm² ... 95 mm²**	**40 mm**
PTPOWER 185	**95 mm² ... 185 mm²**	**40 mm**

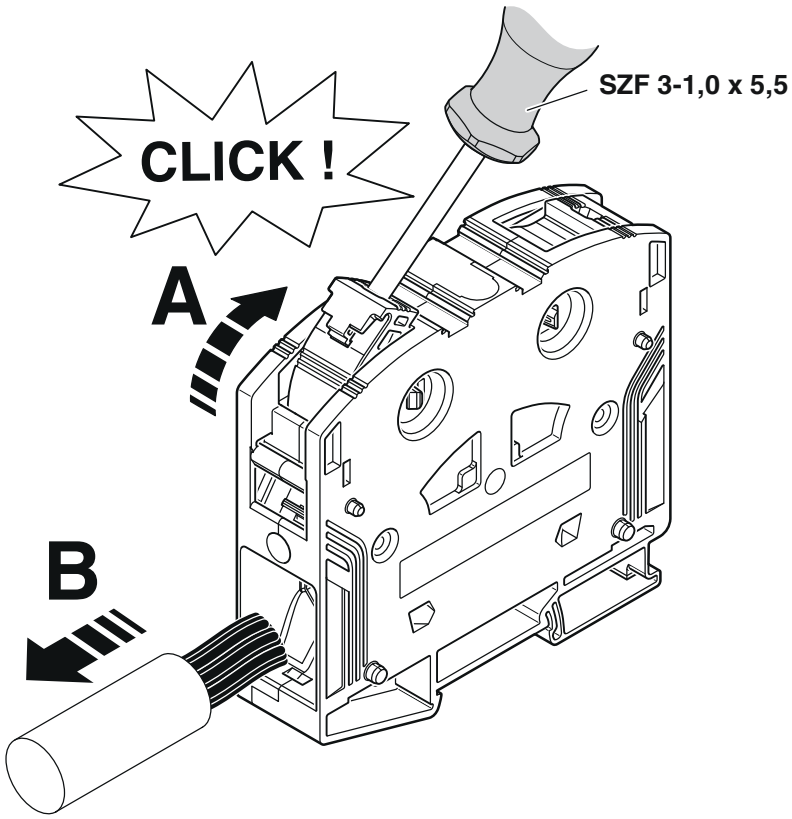

Circuit diagram

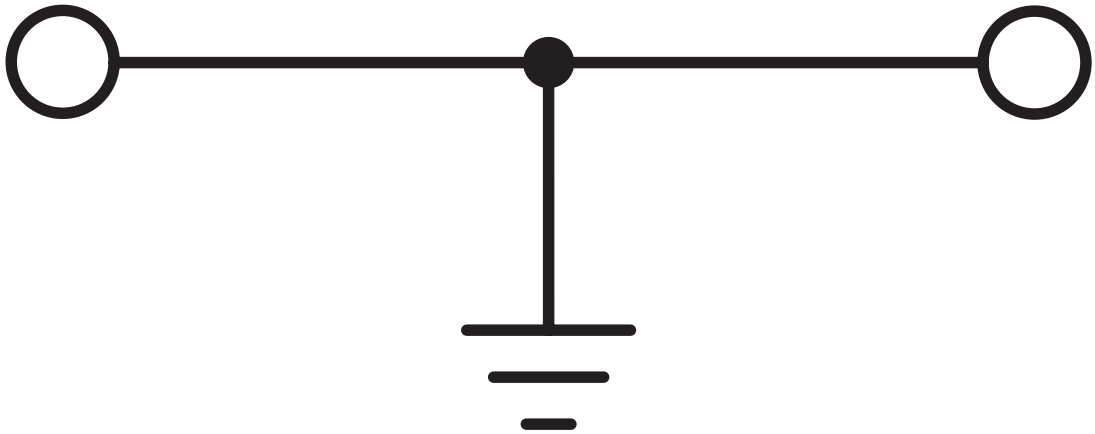

Approvals

To download certificates, visit the product detail page: https://www.phoenixcontact.com/gb/products/3260052

cUL Recognized
Approval ID: E60425

	Nominal voltage U_N	Nominal current I_N	Cross section AWG	Cross section mm^2
C				
	-	-	8 - 1/0	-

UL Recognized
Approval ID: E60425

	Nominal voltage U_N	Nominal current I_N	Cross section AWG	Cross section mm^2
E				
	-	-	8 - 1/0	-

DNV
Approval ID: TAE00000Z9

CSA
Approval ID: 13631

	Nominal voltage U_N	Nominal current I_N	Cross section AWG	Cross section mm^2
B				
	-	-	8 - 1/0	-
C				
	-	-	8 - 1/0	-

CCC
Approval ID: 2020322313000630

UKCA-EX
Approval ID: CML 22UKEX1227U

ATEX
Approval ID: SEV14ATEX0156U

	Nominal voltage U_N	Nominal current I_N	Cross section AWG	Cross section mm^2
keine				
Only rigid conductors	-	-	-	10 - 70
multi-stranded with ferrule	-	-	-	16 - 50

IECEx
Approval ID: IECExSEV14.0013U

	Nominal voltage U_N	Nominal current I_N	Cross section AWG	Cross section mm^2
keine				
Only rigid conductors	-	-	-	10 - 70
multi-stranded with ferrule	-	-	-	16 - 50

EAC Ex
Approval ID: KZ 7500525010101950

Classifications

ECLASS

ECLASS-13.0	27250103
ECLASS-15.0	27250103

ETIM

ETIM 10.0	EC000901

UNSPSC

UNSPSC 21.0	39121400

Environmental product compliance

EU RoHS

Fulfills EU RoHS substance requirements	Yes, No exemptions

China RoHS

Environment friendly use period (EFUP)	EFUP-E
	No hazardous substances above the limits

EU REACH SVHC

REACH candidate substance (CAS No.)	No substance above 0.1 wt%

EF3.1 Climate Change

CO2e kg	3.428 kg CO2e

Phoenix Contact 2026 © - all rights reserved
https://www.phoenixcontact.com

PHOENIX CONTACT Ltd
Halesfield 13, Telford
Shropshire, TF7 4PG
01952 681700
info@phoenixcontact.co.uk