UKH 240-FE - High-current terminal block

3247056

https://www.phoenixcontact.com/gb/products/3247056

Please be informed that the data shown in this PDF document is generated from our online catalog. Please find the complete data in the user documentation. Our general terms of use for downloads are valid.





High-current terminal block, nom. voltage: 1000 V, nominal current: 415 A, number of connections: 2, connection method: Screw connection, Rated cross section: 240 mm^2, cross section: 70 mm^2 - 240 mm^2, mounting type: NS 35/15, NS 32, color: black/yellow

Your advantages

- Reliable cable connection is ensured by three-point centering of the conductor in the prismatic sleeve base
- Screw locking by means of spring-loaded elements in the clamping part
- Low contact resistance of the contact surface due to ribbing

Commercial data

Item number	3247056
Packing unit	3 pc
Minimum order quantity	3 pc
Sales key	BE1311
Product key	BE1311
GTIN	4046356707220
Weight per piece (including packing)	492.667 g
Weight per piece (excluding packing)	485.75 g
Customs tariff number	85369010
Country of origin	IN

Technical data

Notes

General

Note	For a reliable contact of multi stranded conductors it is recommended to untwist multi stranded conductors.

Product properties

Product type	High current terminal block
Number of connections	2
Number of rows	1
Potentials	1

Insulation characteristics

Overvoltage category	III
Degree of pollution	3

Electrical properties

Rated surge voltage	8 kV
Maximum power dissipation for nominal condition	13.78 W

Connection data

Number of connections per level	2
Nominal cross section	240 mm²

Level 1 above 1 below 1

Connection method	Screw connection
Screw thread	M10
Note	Screws with hexagonal socket
Tightening torque	25 ... 30 Nm
Stripping length	40 mm
Internal cylindrical gage	B15
Connection in acc. with standard	IEC 60947-7-1
Conductor cross-section rigid	70 mm² ... 240 mm²
Cross section AWG	3/0 ... 250 kcmil (converted acc. to IEC)
Conductor cross-section flexible	70 mm² ... 240 mm²
Conductor cross-section, flexible [AWG]	3/0 ... 350 kcmil (converted acc. to IEC)
Conductor cross-section flexible (ferrule without plastic sleeve)	70 mm² ... 185 mm²
Flexible conductor cross-section (ferrule with plastic sleeve)	70 mm² ... 185 mm²
Cross-section with insertion bridge, rigid	240 mm²
Cross-section with insertion bridge, flexible	185 mm²
2 conductors with same cross section, rigid	35 mm² ... 95 mm²
2 conductors with same cross section, flexible	50 mm² ... 95 mm²
2 conductors with same cross section, flexible, with ferrule	35 mm² ... 50 mm²

without plastic sleeve	
Nominal cross section	240 mm²
Nominal current	415 A
Maximum load current	415 A (with 240 mm² conductor cross-section)
Nominal voltage	1000 V
Note	Note: Product releases, connection cross sections and notes on connecting aluminum cables can be found in the download area.

Ex data

Rated data (ATEX/IECEx)

Identification	Ⓔx II 2 GD Ex eb IIC Gb
Operating temperature range	-60 °C ... 110 °C
Ex-certified accessories	1201947 VDE-ISS 8
	1201659 E/AL-NS 32
	1201662 E/AL-NS 35
List of bridges	Insertion bridge / EB 2-36/UKH / 0201401
	Insertion bridge / EB 3-36/UKH / 0201414
Bridge data	270 A (240 mm²)
Ex temperature increase	40 K (389 A/240 mm²)
at bridging with insertion bridge	690 V
Rated insulation voltage	1000 V
output	(Permanent)

Ex level General

Rated voltage	1100 V
Rated current	350 A
Maximum load current	350 A
Contact resistance	0.03 mΩ

Ex connection data General

Stripping length	40 mm
Torque range	25 Nm ... 30 Nm
Nominal cross section	240 mm²
Rated cross section AWG	500 kcmil
Connection capacity rigid	70 mm² ... 240 mm²
Connection capacity AWG	2/0 ... 500 kcmil
Connection capacity flexible	70 mm² ... 240 mm²
Connection capacity AWG	2/0 ... 500 kcmil
2 conductors with same cross section, solid	35 mm² ... 95 mm²
2 conductors with the same cross-section AWG rigid	2 ... 3/0
2 conductors with same cross section, stranded	50 mm² ... 95 mm²
2 conductors with the same cross-section AWG flexible	1/0 ... 3/0

Dimensions

Dimensional drawing	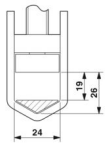
Width	36 mm
Height	100 mm
Depth on NS 32	129 mm
Depth on NS 35/15	131.5 mm

Material specifications

Color	multicolored (RAL -)
	black (RAL 9005)
	yellow (RAL 1018)
Flammability rating according to UL 94	V0
Insulating material group	I
Insulating material	PA
Static insulating material application in cold	-60 °C
Relative insulation material temperature index (Elec., UL 746 B)	130 °C
Fire protection for rail vehicles (DIN EN 45545-2) R22	HL 1 - HL 3
Fire protection for rail vehicles (DIN EN 45545-2) R23	HL 1 - HL 3
Fire protection for rail vehicles (DIN EN 45545-2) R24	HL 1 - HL 3
Fire protection for rail vehicles (DIN EN 45545-2) R26	HL 1 - HL 3
Surface flammability NFPA 130 (ASTM E 162)	passed
Specific optical density of smoke NFPA 130 (ASTM E 662)	passed
Smoke gas toxicity NFPA 130 (SMP 800C)	passed

Electrical tests

Surge voltage test

Result	Test passed
Short-time withstand current 240 mm²	28.8 kA
Result	Test passed

Power-frequency withstand voltage

Test voltage setpoint	2.2 kV
Result	Test passed

Mechanical properties

Mechanical data

Open side panel	No

Mechanical tests

Mechanical strength

Result	Test passed

Attachment on the carrier

DIN rail/fixing support	NS 32/NS 35
Result	Test passed

Test for conductor damage and slackening

Rotation speed	10 (+/- 2) rpm
Revolutions	135
Conductor cross-section/weight	70 mm²/10.4 kg
	240 mm²/20.0 kg
Result	Test passed

Environmental and real-life conditions

Needle-flame test

Time of exposure	30 s
Result	Test passed

Oscillation/broadband noise

Specification	DIN EN 50155 (VDE 0115-200):2022-06
Spectrum	Long life test category 2, bogie-mounted
Frequency	f_1 = 5 Hz to f_2 = 250 Hz
ASD level	6.12 (m/s²)²/Hz
Acceleration	3.12g
Test duration per axis	5 h
Test directions	X-, Y- and Z-axis
Result	Test passed

Shocks

Specification	DIN EN 50155 (VDE 0115-200):2022-06
Pulse shape	Half-sine
Acceleration	5g
Shock duration	30 ms
Number of shocks per direction	3
Test directions	X-, Y- and Z-axis (pos. and neg.)
Result	Test passed

Ambient conditions

Ambient temperature (operation)	-60 °C ... 110 °C (Operating temperature range incl. self-heating; for max. short-term operating temperature, see RTI Elec.)
Ambient temperature (storage/transport)	-25 °C ... 60 °C (for a short time, not exceeding 24 h, -60 °C to +70 °C)
Ambient temperature (assembly)	-5 °C ... 70 °C
Ambient temperature (actuation)	-5 °C ... 70 °C
Permissible humidity (operation)	20 % ... 90 %
Permissible humidity (storage/transport)	30 % ... 70 %

Standards and regulations

Connection in acc. with standard	IEC 60947-7-1

Mounting

Mounting type	NS 35/15
	NS 32

Drawings

Dimensional drawing

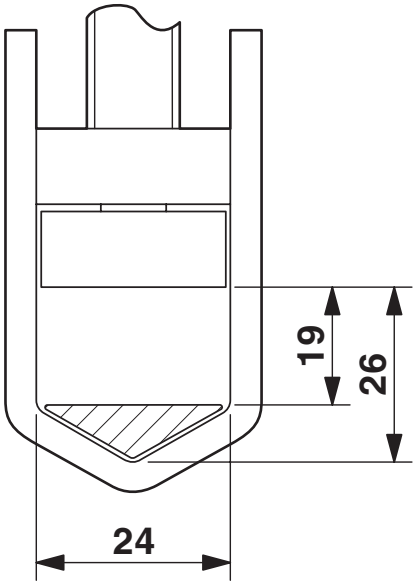

Schematic diagram

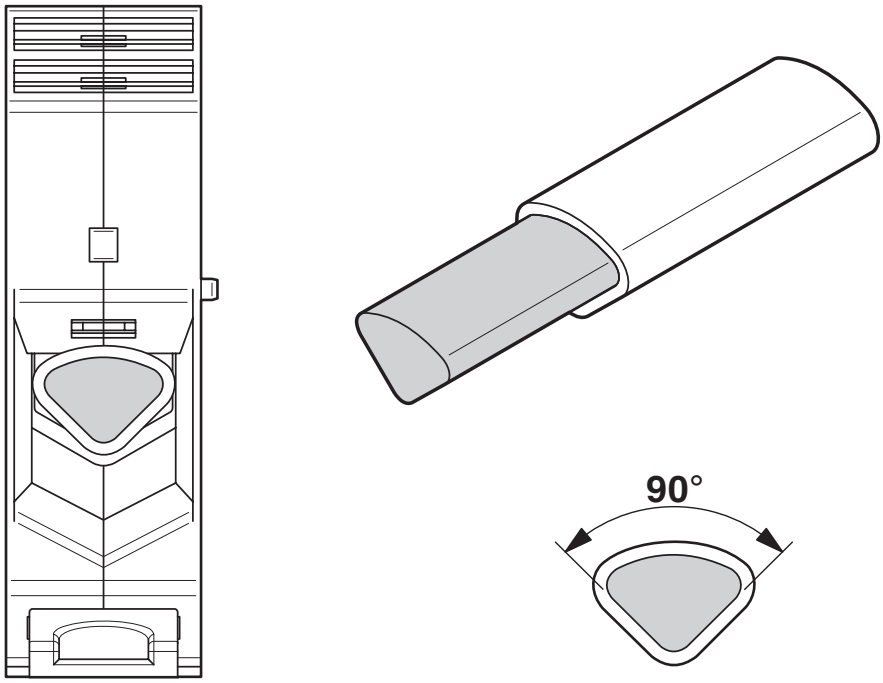

Connecting aluminum cables. Further notes can be found in the download area

Circuit diagram



Approvals

To download certificates, visit the product detail page: https://www.phoenixcontact.com/gb/products/3247056

cULus Recognized
Approval ID: E60425

	Nominal voltage U_N	Nominal current I_N	Cross section AWG	Cross section mm^2
B				
	600 V	380 A	2/0 - 500	-
Multi-conductor connection	600 V	380 A	2 - 3/0	-
C				
	600 V	380 A	2/0 - 500	-
Multi-conductor connection	600 V	380 A	2 - 3/0	-

ATEX
Approval ID: KEMA99ATEX8332U

	Nominal voltage U_N	Nominal current I_N	Cross section AWG	Cross section mm^2
keine				
Type examination certificate	1100 V	350 A	-	70 - 240

IECEx
Approval ID: IECEx KEM 06.0030U

	Nominal voltage U_N	Nominal current I_N	Cross section AWG	Cross section mm^2
keine				
	1100 V	350 A	-	70 - 240

CCC
Approval ID: 2020322313000623

UKCA-EX
Approval ID: DEKRA 21UKEX0309U

Classifications

ECLASS

ECLASS-13.0	27250101
ECLASS-15.0	27250101

ETIM

ETIM 10.0	EC000897

UNSPSC

UNSPSC 21.0	39121400

Environmental product compliance

EU RoHS

Fulfills EU RoHS substance requirements	Yes, No exemptions

China RoHS

Environment friendly use period (EFUP)	EFUP-E
	No hazardous substances above the limits

EU REACH SVHC

REACH candidate substance (CAS No.)	No substance above 0.1 wt%

Phoenix Contact 2026 © - all rights reserved
https://www.phoenixcontact.com

PHOENIX CONTACT Ltd
Halesfield 13, Telford
Shropshire, TF7 4PG
01952 681700
info@phoenixcontact.co.uk