UKH 50-FE - High-current terminal block

3247052

https://www.phoenixcontact.com/gb/products/3247052

Please be informed that the data shown in this PDF document is generated from our online catalog. Please find the complete data in the user documentation. Our general terms of use for downloads are valid.





High-current terminal block, nom. voltage: 1000 V, nominal current: 150 A, number of connections: 2, number of positions: 1, connection method: Screw connection, Rated cross section: 50 mm^2, cross section: 16 mm^2 - 70 mm^2, mounting type: NS 35/7,5, NS 35/15, NS 32, NS 35/15-2,3, color: black/yellow

Your advantages

- Reliable cable connection is ensured by three-point centering of the conductor in the prismatic sleeve base
- Low contact resistance of the contact surface due to ribbing
- Screw locking by means of spring-loaded elements in the clamping part

Commercial data

Item number	3247052
Packing unit	10 pc
Minimum order quantity	10 pc
Sales key	BE1311
Product key	BE1311
GTIN	4046356707183
Weight per piece (including packing)	119.238 g
Weight per piece (excluding packing)	113.794 g
Customs tariff number	85369010
Country of origin	IN

Technical data

Notes

General

Note	For a reliable contact of multi stranded conductors it is recommended to untwist multi stranded conductors.

Product properties

Product type	High current terminal block
Number of positions	1
Number of connections	2
Number of rows	1
Potentials	1

Insulation characteristics

Overvoltage category	III
Degree of pollution	3

Electrical properties

Rated surge voltage	8 kV
Maximum power dissipation for nominal condition	4.73 W

Connection data

Number of connections per level	2
Nominal cross section	50 mm²
Connection method	Screw connection
Screw thread	M6
Tightening torque	6 ... 8 Nm
Stripping length	24 mm
Internal cylindrical gage	B10
Connection in acc. with standard	IEC 60947-7-1
Conductor cross-section rigid	16 mm² ... 70 mm²
Cross section AWG	4 ... 2/0 (converted acc. to IEC)
Conductor cross-section flexible	25 mm² ... 70 mm²
Conductor cross-section, flexible [AWG]	2 ... 2/0 (converted acc. to IEC)
Conductor cross-section flexible (ferrule without plastic sleeve)	16 mm² ... 50 mm²
Flexible conductor cross-section (ferrule with plastic sleeve)	16 mm² ... 50 mm²
2 conductors with same cross section, rigid	10 mm² ... 16 mm²
2 conductors with same cross section, flexible	10 mm² ... 16 mm²
2 conductors with same cross section, flexible, with ferrule without plastic sleeve	10 mm² ... 16 mm²
Nominal cross section	50 mm²
Nominal current	150 A
Maximum load current	150 A (with 50 mm² conductor cross-section)

Nominal voltage	1000 V
Note	Note: Product releases, connection cross sections and notes on connecting aluminum cables can be found in the download area.

Ex data

Rated data (ATEX/IECEx)

Identification	Ⓔx II 2 GD Ex eb IIC Gb
Operating temperature range	-60 °C ... 110 °C
Ex-certified accessories	1205082 SZS 1,2X8,0 VDE
	1201659 E/AL-NS 32
	1201662 E/AL-NS 35
List of bridges	Fixed bridge / FBI 2-20-EX / 0201113
	Fixed bridge / FBI 3-20-EX / 0201812
Bridge data	130.5 A (50 mm²)
Ex temperature increase	40 K (133 A / 50 mm²)
for bridging with bridge	690 V
Rated insulation voltage	630 V
output	(Permanent)

Ex level General

Rated voltage	690 V
Rated current	133 A
Maximum load current	133 A
Contact resistance	0.1 mΩ

Ex connection data General

Torque range	6 Nm ... 8 Nm
Nominal cross section	50 mm²
Rated cross section AWG	1/0
Connection capacity rigid	16 mm² ... 50 mm²
Connection capacity AWG	6 ... 1/0
Connection capacity flexible	25 mm² ... 50 mm²
Connection capacity AWG	4 ... 1/0
2 conductors with same cross section, solid	10 mm² ... 16 mm²
2 conductors with the same cross-section AWG rigid	8 ... 6
2 conductors with same cross section, stranded	10 mm² ... 16 mm²
2 conductors with the same cross-section AWG flexible	8 ... 6

Dimensions

Dimensional drawing	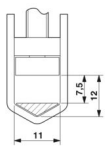

Width	20 mm
Height	75.5 mm
Depth on NS 32	81 mm
Depth on NS 35/15	83.5 mm

Material specifications

Color	multicolored (RAL -)
	black (RAL 9005)
	yellow (RAL 1018)
Flammability rating according to UL 94	V0
Insulating material group	I
Insulating material	PA
Static insulating material application in cold	-60 °C
Relative insulation material temperature index (Elec., UL 746 B)	130 °C
Fire protection for rail vehicles (DIN EN 45545-2) R22	HL 1 - HL 3
Fire protection for rail vehicles (DIN EN 45545-2) R23	HL 1 - HL 3
Fire protection for rail vehicles (DIN EN 45545-2) R24	HL 1 - HL 3
Fire protection for rail vehicles (DIN EN 45545-2) R26	HL 1 - HL 3
Surface flammability NFPA 130 (ASTM E 162)	passed
Specific optical density of smoke NFPA 130 (ASTM E 662)	passed
Smoke gas toxicity NFPA 130 (SMP 800C)	passed

Electrical tests

Surge voltage test

Test voltage setpoint	9.8 kV
Result	Test passed

Temperature-rise test

Requirement temperature-rise test	Increase in temperature ≤ 45 K
Result	Test passed
Short-time withstand current 50 mm²	6 kA
Result	Test passed

Power-frequency withstand voltage

Test voltage setpoint	2.2 kV
Result	Test passed

Mechanical properties

Mechanical data

Open side panel	No

Mechanical tests

Mechanical strength

Result	Test passed

Attachment on the carrier

DIN rail/fixing support	NS 32/NS 35
Test force setpoint	10 N
Result	Test passed

Test for conductor damage and slackening

Rotation speed	10 (+/- 2) rpm
Revolutions	135
Conductor cross-section/weight	16 mm² / 2.9 kg
	50 mm² / 9.5 kg
	70 mm²/10.4 kg
Result	Test passed

Environmental and real-life conditions

Needle-flame test

Time of exposure	30 s
Result	Test passed

Oscillation/broadband noise

Specification	DIN EN 50155 (VDE 0115-200):2018-05
Spectrum	Long life test category 2, bogie-mounted
Frequency	f_1 = 5 Hz to f_2 = 250 Hz
ASD level	6.12 (m/s²)²/Hz
Acceleration	3.12g
Test duration per axis	5 h
Test directions	X-, Y- and Z-axis
Result	Test passed

Shocks

Specification	DIN EN 50155 (VDE 0115-200):2022-06
Pulse shape	Half-sine
Acceleration	5g
Shock duration	30 ms
Number of shocks per direction	3
Test directions	X-, Y- and Z-axis (pos. and neg.)
Result	Test passed

Ambient conditions

Ambient temperature (operation)	-60 °C ... 110 °C (Operating temperature range incl. self-heating; for max. short-term operating temperature, see RTI Elec.)
Ambient temperature (storage/transport)	-25 °C ... 60 °C (for a short time, not exceeding 24 h, -60 °C to +70 °C)
Ambient temperature (assembly)	-5 °C ... 70 °C
Ambient temperature (actuation)	-5 °C ... 70 °C
Permissible humidity (operation)	20 % ... 90 %

Permissible humidity (storage/transport)	30 % ... 70 %

Standards and regulations

Connection in acc. with standard	IEC 60947-7-1

Mounting

Mounting type	NS 35/7,5
	NS 35/15
	NS 32
	NS 35/15-2,3

Drawings

Dimensional drawing

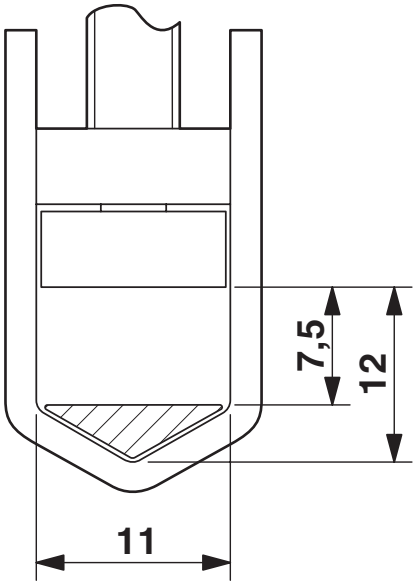

Schematic diagram

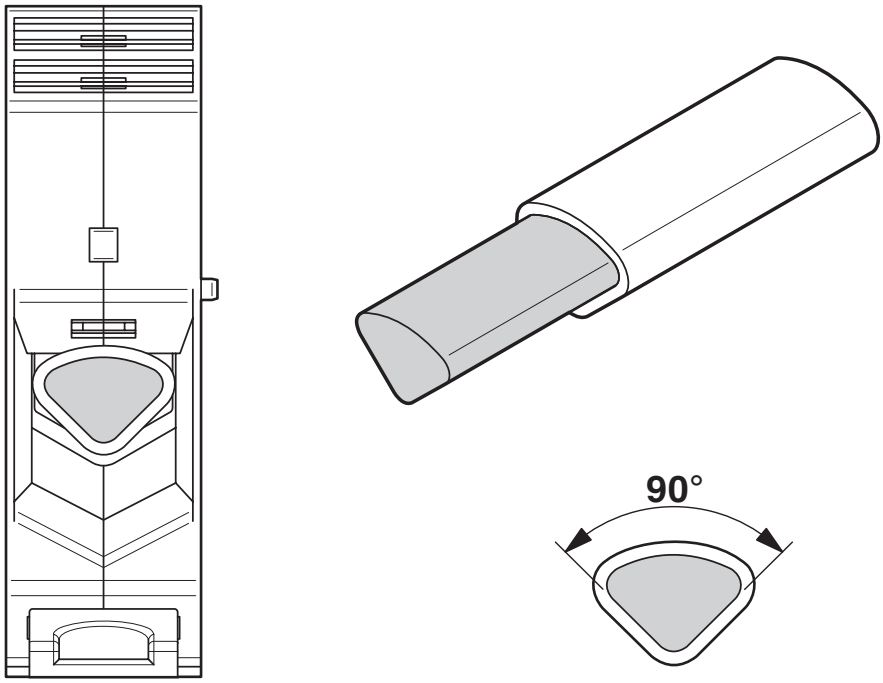

Connecting aluminum cables. Further notes can be found in the download area

Circuit diagram



Approvals

To download certificates, visit the product detail page: https://www.phoenixcontact.com/gb/products/3247052

CSA
Approval ID: 13631

	Nominal voltage U_N	Nominal current I_N	Cross section AWG	Cross section mm^2
B				
	600 V	150 A	6 - 1/0	-
C				
	600 V	150 A	6 - 1/0	-

cULus Recognized
Approval ID: E60425

	Nominal voltage U_N	Nominal current I_N	Cross section AWG	Cross section mm^2
B				
	600 V	150 A	6 - 1/0	-
Multi-conductor connection	600 V	150 A	8 - 6	-
C				
	600 V	150 A	6 - 1/0	-
Multi-conductor connection	600 V	150 A	8 - 6	-

LR
Approval ID: LR2420186TA

VDE Zeichengenehmigung
Approval ID: 40036368

	Nominal voltage U_N	Nominal current I_N	Cross section AWG	Cross section mm^2
keine				
	1000 V	150 A	-	- 50

IECEE CB Scheme
Approval ID: DE1-62936_M1

	Nominal voltage U_N	Nominal current I_N	Cross section AWG	Cross section mm^2
keine				
	1000 V	150 A	-	- 50

DNV
Approval ID: TAE00001CT

ATEX
Approval ID: KEMA98ATEX1786U

EAC Ex
Approval ID: KZ 7500525010101950

IECEx
Approval ID: KEMA98ATEX1786U

CCC
Approval ID: 2020322313000623

UKCA-EX
Approval ID: DEKRA 21UKEX0307U

UL Comp Hazloc CA US
Approval ID: UL US CA L 192998

	Nominal voltage U_N	Nominal current I_N	Cross section AWG	Cross section mm^2
keine				
	600 V	150 A	6 - 1/0	-

Classifications

ECLASS

ECLASS-13.0	27250101
ECLASS-15.0	27250101

ETIM

ETIM 10.0	EC000897

UNSPSC

UNSPSC 21.0	39121400

Environmental product compliance

EU RoHS

Fulfills EU RoHS substance requirements	Yes, No exemptions

China RoHS

Environment friendly use period (EFUP)	EFUP-E
	No hazardous substances above the limits

EU REACH SVHC

REACH candidate substance (CAS No.)	No substance above 0.1 wt%

Phoenix Contact 2026 © - all rights reserved
https://www.phoenixcontact.com

PHOENIX CONTACT Ltd
Halesfield 13, Telford
Shropshire, TF7 4PG
01952 681700
info@phoenixcontact.co.uk