# C-RCEI 1,5/M3 - Ring cable lug

3241201

https://www.phoenixcontact.com/gb/products/3241201

Please be informed that the data shown in this PDF document is generated from our online catalog. Please find the complete data in the user documentation. Our general terms of use for downloads are valid.



Ring cable lug, red, 0.5 ... 1.5 mm$^2$, M3, with copper sleeve incorporated, for insulation crimp

## Your advantages

- The sleeves are conically tapered to facilitate easy and correct insertion of the conductor
- The mechanical load capacity of the connection is significantly increased by the additionally applied copper sleeve (insulation crimp)

## Commercial data

| | |
|---|---|
| Item number | 3241201 |
| Packing unit | 100 pc |
| Minimum order quantity | 100 pc |
| Sales key | BH3421 |
| Product key | BH3421 |
| GTIN | 4046356816168 |
| Weight per piece (including packing) | 0.785 g |
| Weight per piece (excluding packing) | 0.785 g |
| Customs tariff number | 85369010 |
| Country of origin | TW |

## Technical data

### Product properties

| | |
|---|---|
| Product type | Connector |
| Product property | Halogen-free |
| | Conical conductor entry |
| | Brazed |
| | PA-insulated |
| | With copper sleeve incorporated, for insulation crimp |
| | Tin-plated |
| | Temperature range: -20°C ... +105°C |
| | Flammability rating V2 in accordance with UL 94 |

### Dimensions

| | |
|---|---|
| Dimensional drawing | 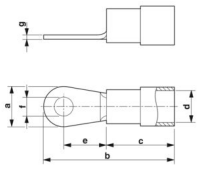 |
| Width | 5.5 mm |
| Sleeve length | 17.7 mm |
| Length of the insulating material sleeve | 11 mm |
| Distance from the center to the insulating material sleeve | 4 mm |
| Min. material thickness | 0.75 mm |
| Inner dimensions of the insulating collar | 4.1 mm |

Internal dimensions

| | |
|---|---|
| Internal diameter | 3.2 mm |

### Material specifications

| | |
|---|---|
| Color | red (RAL 3001) |
| Material | Copper |
| Flammability rating according to UL 94 | V2 |
| Coating | tin-plated |
| Insulating material | PA |
| Components | halogen-free |

### Mechanical properties

Technical data

| | |
|---|---|
| Sleeve length | 17.7 mm |

### Environmental and real-life conditions

Ambient conditions

| | |
|---|---|
| Optimum ambient temperature (storage/transport) | 20.00 °C 50.00 % Humidity (RH), store inside sealed original packaging. Avoid direct sunlight and heat. |
| Ambient temperature (operation) | -20 °C ... 105 °C |
| Ambient temperature (assembly) | -20 °C ... 100 °C |
| Short-term temperature | 100 °C |

## Drawings

Dimensional drawing

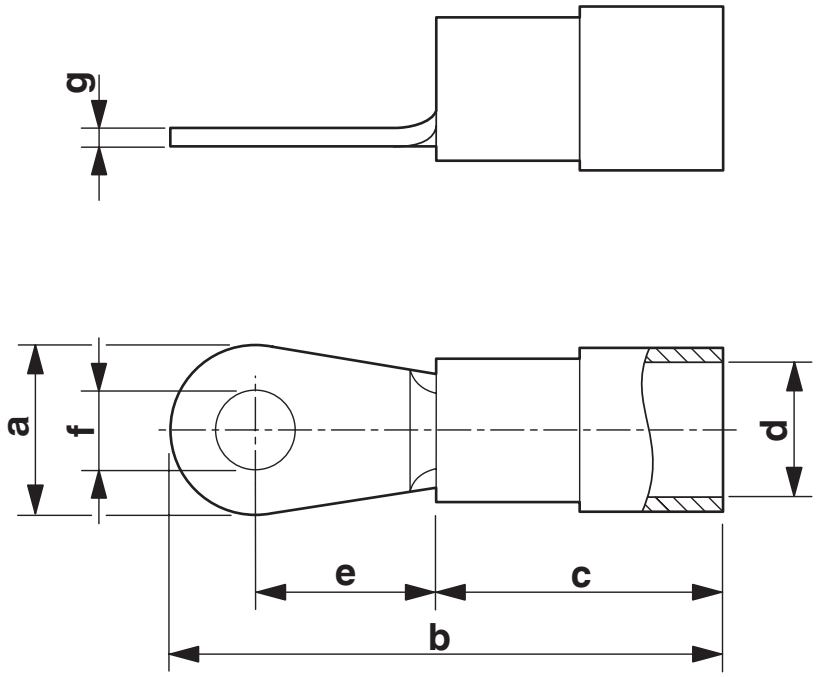

## Classifications

### ECLASS

| | |
|---|---|
| ECLASS-13.0 | 27400204 |
| ECLASS-15.0 | 27400204 |

### ETIM

| | |
|---|---|
| ETIM 10.0 | EC001052 |

### UNSPSC

| | |
|---|---|
| UNSPSC 21.0 | 27121700 |

## Environmental product compliance

EU RoHS

| | |
|---|---|
| Fulfills EU RoHS substance requirements | Yes, No exemptions |

China RoHS

| | |
|---|---|
| Environment friendly use period (EFUP) | EFUP-E |
| | No hazardous substances above the limits |

EU REACH SVHC

| | |
|---|---|
| REACH candidate substance (CAS No.) | No substance above 0.1 wt% |

EF3.1 Climate Change

| | |
|---|---|
| CO2e kg | 0.02 kg CO2e |


Phoenix Contact 2026 © - all rights reserved
https://www.phoenixcontact.com



PHOENIX CONTACT Ltd
Halesfield 13, Telford
Shropshire, TF7 4PG
01952 681700
info@phoenixcontact.co.uk