# C-RC 95/M12 DIN - Ring cable lug

3240122

https://www.phoenixcontact.com/gb/products/3240122

Please be informed that the data shown in this PDF document is generated from our online catalog. Please find the complete data in the user documentation. Our general terms of use for downloads are valid.



Ring cable lug, non-insulated, 95 $mm^2$, M12

## Your advantages

- The CRIMPFOX-RC... tools from our CRIMPFOX range of crimping pliers are available for optimum crimping
- The hard-soldered press zone enables maximum conductor pull-out values to be achieved
- The ring cable lugs without plastic sleeve are made from high-quality tin-plated electrolytic copper for maximum protection against corrosion

## Commercial data

| | |
|---|---|
| Item number | 3240122 |
| Packing unit | 50 pc |
| Minimum order quantity | 50 pc |
| Sales key | BH3422 |
| Product key | BH3422 |
| GTIN | 4046356453394 |
| Weight per piece (including packing) | 39.372 g |
| Weight per piece (excluding packing) | 39.372 g |
| Customs tariff number | 85369010 |
| Country of origin | CN |

## Technical data

### Product properties

| | |
|---|---|
| Product type | Connector |
| Product property | Design according to DIN 46234 |
| | Brazed |
| | Tin-plated |

### Dimensions

| | |
|---|---|
| Dimensional drawing | 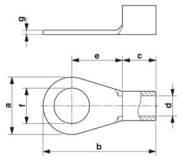 |
| Width | 24 mm |
| Sleeve length | 54 mm |
| Length of the insulating material sleeve | 20 mm |
| Maximum stripping length | 23 mm |
| Distance from the center to the insulating material sleeve | 22 mm |
| Min. material thickness | 2.5 mm |
| Inner dimensions of the insulating collar | 15 mm |

Internal dimensions

| | |
|---|---|
| Internal diameter | 13 mm |

### Material specifications

| | |
|---|---|
| Color | silver-colored |
| Material | Copper |
| Coating | tin-plated |

### Mechanical properties

Technical data

| | |
|---|---|
| Sleeve length | 54 mm |

### Environmental and real-life conditions

Ambient conditions

| | |
|---|---|
| Ambient temperature (operation) | 110 °C |

### Standards and regulations

| | |
|---|---|
| Design according to standard | DIN 46234 |

## Drawings

Dimensional drawing

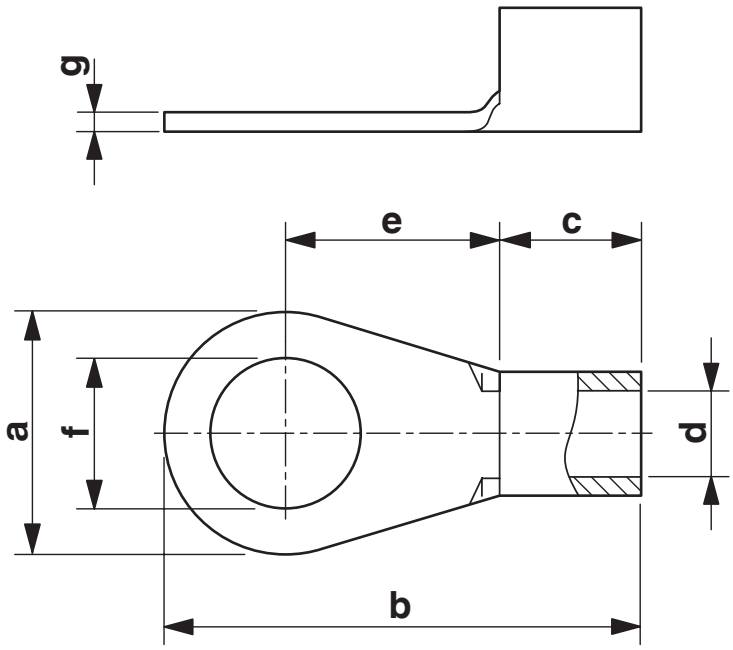

## Classifications

### ECLASS

| | |
|---|---|
| ECLASS-13.0 | 27400204 |
| ECLASS-15.0 | 27400204 |

### ETIM

| | |
|---|---|
| ETIM 10.0 | EC001052 |

### UNSPSC

| | |
|---|---|
| UNSPSC 21.0 | 27121700 |

## Environmental product compliance

EU RoHS

| | |
|---|---|
| Fulfills EU RoHS substance requirements | Yes, No exemptions |

China RoHS

| | |
|---|---|
| Environment friendly use period (EFUP) | EFUP-E |
| | No hazardous substances above the limits |

EU REACH SVHC

| | |
|---|---|
| REACH candidate substance (CAS No.) | No substance above 0.1 wt% |

EF3.1 Climate Change

| | |
|---|---|
| CO2e kg | 2.339 kg CO2e |


Phoenix Contact 2026 © - all rights reserved
https://www.phoenixcontact.com



PHOENIX CONTACT Ltd
Halesfield 13, Telford
Shropshire, TF7 4PG
01952 681700
info@phoenixcontact.co.uk