C-RC 16/M10 DIN - Ring cable lug

3240097

https://www.phoenixcontact.com/gb/products/3240097

Please be informed that the data shown in this PDF document is generated from our online catalog. Please find the complete data in the user documentation. Our general terms of use for downloads are valid.



Ring cable lug, non-insulated, 16 mm^2, M10

Your advantages

- The CRIMPFOX-RC... tools from our CRIMPFOX range of crimping pliers are available for optimum crimping
- The hard-soldered press zone enables maximum conductor pull-out values to be achieved
- The ring cable lugs without plastic sleeve are made from high-quality tin-plated electrolytic copper for maximum protection against corrosion

Commercial data

Item number	3240097
Packing unit	100 pc
Minimum order quantity	100 pc
Sales key	BH3422
Product key	BH3422
GTIN	4046356453141
Weight per piece (including packing)	5.177 g
Weight per piece (excluding packing)	5.177 g
Customs tariff number	85369010
Country of origin	CN

Technical data

Product properties

Product type	Connector
Product property	Design according to DIN 46234
	Brazed
	Tin-plated

Dimensions

Dimensional drawing	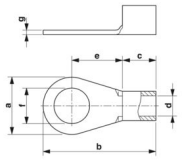
Width	18 mm
Sleeve length	33 mm
Length of the insulating material sleeve	10 mm
Maximum stripping length	13 mm
Distance from the center to the insulating material sleeve	14 mm
Min. material thickness	1.2 mm
Inner dimensions of the insulating collar	5.8 mm

Internal dimensions

Internal diameter	10.5 mm

Material specifications

Color	silver-colored
Material	Copper
Coating	tin-plated

Mechanical properties

Technical data

Sleeve length	33 mm

Environmental and real-life conditions

Ambient conditions

Ambient temperature (operation)	110 °C

Standards and regulations

Design according to standard	DIN 46234

Drawings

Dimensional drawing

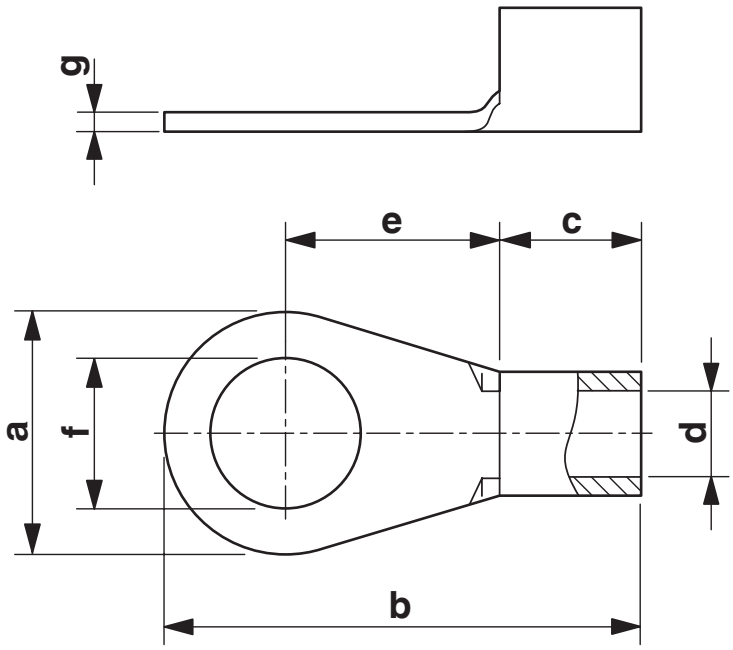

Classifications

ECLASS

ECLASS-13.0	27400204
ECLASS-15.0	27400204

ETIM

ETIM 10.0	EC001052

UNSPSC

UNSPSC 21.0	27121700

Environmental product compliance

EU RoHS

Fulfills EU RoHS substance requirements	Yes, No exemptions

China RoHS

Environment friendly use period (EFUP)	EFUP-E
	No hazardous substances above the limits

EU REACH SVHC

REACH candidate substance (CAS No.)	No substance above 0.1 wt%

EF3.1 Climate Change

CO2e kg	0.076 kg CO2e

Phoenix Contact 2026 © - all rights reserved
https://www.phoenixcontact.com

PHOENIX CONTACT Ltd
Halesfield 13, Telford
Shropshire, TF7 4PG
01952 681700
info@phoenixcontact.co.uk