C-BCI 6/2,8 - Cable lug

3240047

https://www.phoenixcontact.com/gb/products/3240047

Please be informed that the data shown in this PDF document is generated from our online catalog. Please find the complete data in the user documentation. Our general terms of use for downloads are valid.



Flat pin cable lug, with tab, soldered neck, yellow, 4 ... 6 mm^2, pin width: 2.8 mm, easy conductor entry with Easy-Entry, for horizontal and vertical crimping with CRIMPFOX-RCI 6

Your advantages

- "Easy Entry" for easy and reliable conductor entry
- Halogen-free
- Electrogalvanized

Commercial data

Item number	3240047
Packing unit	50 pc
Minimum order quantity	50 pc
Sales key	BH3461
Product key	BH3461
GTIN	4046356452656
Weight per piece (including packing)	1.573 g
Weight per piece (excluding packing)	1.57 g
Customs tariff number	85369010
Country of origin	TW

Technical data

Product properties

Product type	Connector
Product property	Halogen-free
	With “Easy Entry” system
	Brazed
	PA-insulated

Dimensions

Dimensional drawing	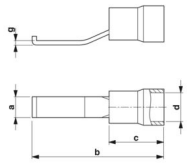
Width	2.8 mm
Sleeve length	32 mm
Length of the insulating material sleeve	14 mm
Length contact range	18 mm
Maximum stripping length	9 mm
Min. material thickness	0.8 mm
Inner dimensions of the insulating collar	6.5 mm

Material specifications

Color	yellow (RAL 1018)
Material	Copper
Flammability rating according to UL 94	V2
Coating	tin-plated
Insulating material	PA
Components	halogen-free

Mechanical properties

Technical data

Sleeve length	32 mm

Environmental and real-life conditions

Ambient conditions

Ambient temperature (operation)	-20 °C ... 105 °C
Permanent temperature	105 °C
Short-term temperature	120 °C

Drawings

Dimensional drawing

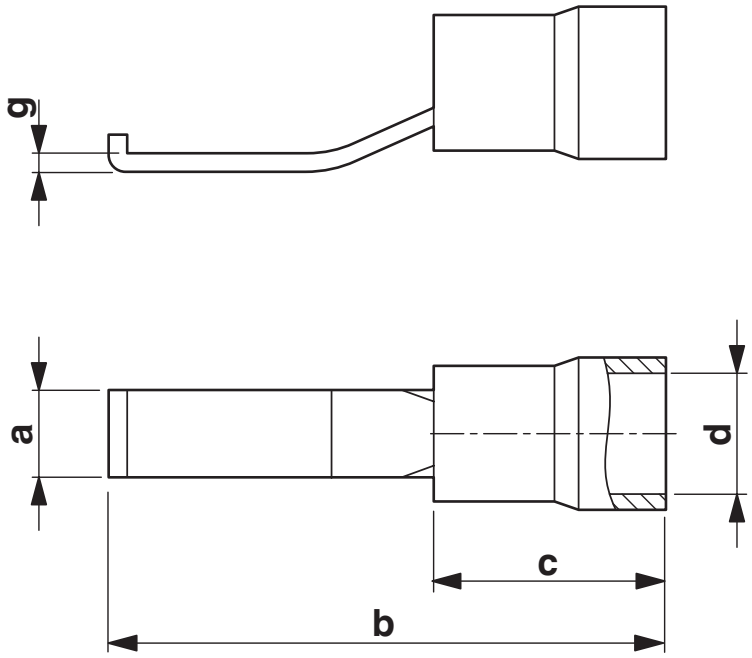

Classifications

ECLASS

ECLASS-13.0	27400204
ECLASS-15.0	27400204

ETIM

ETIM 10.0	EC001052

UNSPSC

UNSPSC 21.0	27121700

Environmental product compliance

EU RoHS

Fulfills EU RoHS substance requirements	Yes, No exemptions

China RoHS

Environment friendly use period (EFUP)	EFUP-E
	No hazardous substances above the limits

EU REACH SVHC

REACH candidate substance (CAS No.)	No substance above 0.1 wt%

EF3.1 Climate Change

CO2e kg	0.035 kg CO2e

Phoenix Contact 2026 © - all rights reserved
https://www.phoenixcontact.com

PHOENIX CONTACT Ltd
Halesfield 13, Telford
Shropshire, TF7 4PG
01952 681700
info@phoenixcontact.co.uk