UKH 70/4X10 BU - Potential collective terminal

3213143

https://www.phoenixcontact.com/gb/products/3213143

Please be informed that the data shown in this PDF document is generated from our online catalog. Please find the complete data in the user documentation. Our general terms of use for downloads are valid.

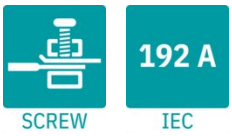

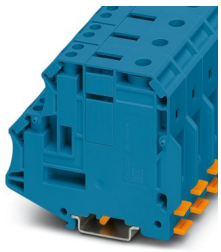

Potential collective terminal, nom. voltage: 1500 V, nominal current: 192 A, number of connections: 5, number of positions: 1, connection method: Screw connection, cross section: 16 mm^2 - 95 mm^2, Screw connection, cross section: 1.5 mm^2 - 16 mm^2, mounting type: NS 35/7,5, NS 35/15, NS 35/15-2,3, NS 32, color: blue

Your advantages

- Reliable cable connection is ensured by three-point centering of the conductor in the prismatic sleeve base
- Low contact resistance of the contact surface due to ribbing
- Screw locking by means of spring-loaded elements in the clamping part

Commercial data

Item number	3213143
Packing unit	10 pc
Minimum order quantity	10 pc
Sales key	BE1311
Product key	BE1311
GTIN	4046356817837
Weight per piece (including packing)	141.4 g
Weight per piece (excluding packing)	125.2 g
Customs tariff number	85369010
Country of origin	CN

Technical data

Product properties

Product type	High current terminal block
Product family	UKH
Number of positions	1
Number of connections	5
Number of rows	1
Potentials	1

Insulation characteristics

Overvoltage category	III
Degree of pollution	3

Electrical properties

Rated surge voltage	8 kV
Maximum power dissipation for nominal condition	6.27 W

Connection data

Number of connections per level	5
Nominal cross section	70 mm²
Rated cross section AWG	2/0

Level 1 above 1

Connection method	Screw connection
Screw thread	M8
Tightening torque	8 ... 10 Nm
Stripping length	24 mm
Internal cylindrical gage	A11
Connection in acc. with standard	IEC 60947-7-1
Conductor cross-section rigid	16 mm² ... 95 mm²
Cross section AWG	4 ... 3/0 (converted acc. to IEC)
Conductor cross-section flexible	25 mm² ... 70 mm²
Conductor cross-section, flexible [AWG]	2 ... 2/0 (converted acc. to IEC)
Conductor cross-section flexible (ferrule without plastic sleeve)	16 mm² ... 70 mm²
Flexible conductor cross-section (ferrule with plastic sleeve)	16 mm² ... 70 mm²
2 conductors with same cross section, rigid	16 mm² ... 25 mm²
2 conductors with the same cross-section AWG rigid	4 ... 3 (converted acc. to IEC)
2 conductors with same cross section, flexible	16 mm² ... 25 mm²
2 conductors with the same cross-section AWG flexible	4 ... 3 (converted acc. to IEC)
2 conductors with same cross section, flexible, with ferrule without plastic sleeve	16 mm² ... 25 mm²
Nominal current	192 A
Maximum load current	192 A (in case of a 70 mm² conductor cross-section, the maximum load current must not be exceeded by the total current

	of all connected conductors.)
Nominal voltage	1500 V DC
	1000 V AC

Level 1+2+3+4 bottom

Connection method	Screw connection
Screw thread	M4
Tightening torque	1.4 ... 1.5 Nm
Stripping length	10 mm
Internal cylindrical gage	A5
Conductor cross-section rigid	1.5 mm² ... 16 mm²
Cross section AWG	16 ... 6 (converted acc. to IEC)
Conductor cross-section flexible	1.5 mm² ... 10 mm²
Conductor cross-section, flexible [AWG]	16 ... 6 (converted acc. to IEC)
Conductor cross-section flexible (ferrule without plastic sleeve)	1.5 mm² ... 10 mm²
Flexible conductor cross-section (ferrule with plastic sleeve)	1.5 mm² ... 6 mm²
Conductor cross-section flexible (2 conductors with the same cross-section, with TWIN ferrule and plastic sleeve)	1.5 mm² ... 6 mm²
2 conductors with same cross section, rigid	1.5 mm² ... 2.5 mm²
2 conductors with the same cross-section AWG rigid	16 ... 14 (converted acc. to IEC)
2 conductors with same cross section, flexible	1.5 mm² ... 2.5 mm²
2 conductors with the same cross-section AWG flexible	16 ... 14 (converted acc. to IEC)
2 conductors with same cross section, flexible, with ferrule without plastic sleeve	1.5 mm² ... 2.5 mm²
Nominal current	57 A
Nominal voltage	1500 V DC
	1000 V AC

Dimensions

Width	20.3 mm
Height	88.5 mm
Depth	79.4 mm
Depth on NS 32	85 mm
Depth on NS 35/7,5	80 mm
Depth on NS 35/15	87.5 mm

Material specifications

Color	blue (RAL 5015)
Flammability rating according to UL 94	V0
Insulating material group	I
Insulating material	PA
Static insulating material application in cold	-60 °C
Temperature index of insulation material (DIN EN 60216-1 (VDE 0304-21))	130 °C
Relative insulation material temperature index (Elec., UL 746 B)	130 °C

Fire protection for rail vehicles (DIN EN 45545-2) R22	HL 1 - HL 3
Fire protection for rail vehicles (DIN EN 45545-2) R23	HL 1 - HL 3
Fire protection for rail vehicles (DIN EN 45545-2) R24	HL 1 - HL 3
Fire protection for rail vehicles (DIN EN 45545-2) R26	HL 1 - HL 3
Calorimetric heat release NFPA 130 (ASTM E 1354)	28 MJ/kg
Surface flammability NFPA 130 (ASTM E 162)	passed
Specific optical density of smoke NFPA 130 (ASTM E 662)	passed
Smoke gas toxicity NFPA 130 (SMP 800C)	passed

Mechanical properties

Mechanical data

Open side panel	No

Environmental and real-life conditions

Ambient conditions

Ambient temperature (operation)	-60 °C ... 110 °C (Operating temperature range incl. self-heating; for max. short-term operating temperature, see RTI Elec.)
Ambient temperature (storage/transport)	-25 °C ... 60 °C (for a short time, not exceeding 24 h, -60 °C to +70 °C)
Ambient temperature (assembly)	-5 °C ... 70 °C
Ambient temperature (actuation)	-5 °C ... 70 °C
Permissible humidity (operation)	20 % ... 90 %
Permissible humidity (storage/transport)	30 % ... 70 %

Standards and regulations

Connection in acc. with standard	IEC 60947-7-1

Mounting

Mounting type	NS 35/7,5
	NS 35/15
	NS 35/15-2,3
	NS 32

Drawings

Schematic diagram

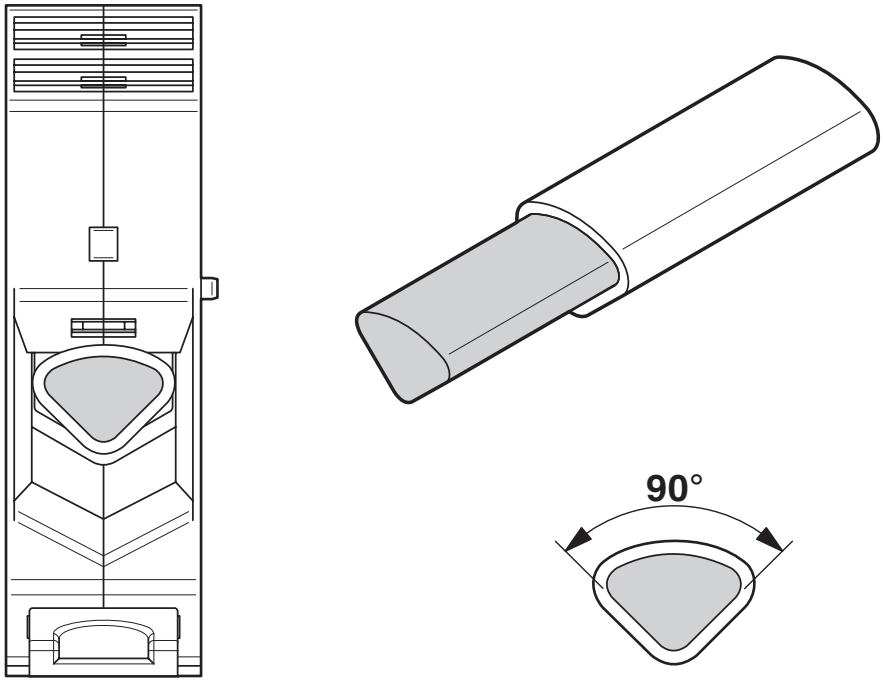

Circuit diagram



Approvals

To download certificates, visit the product detail page: https://www.phoenixcontact.com/gb/products/3213143

CSA
Approval ID: 13631

EAC
Approval ID: KZ7500651131219505

cULus Recognized
Approval ID: E60425

Classifications

ECLASS

ECLASS-13.0	27250101
ECLASS-15.0	27250101

ETIM

ETIM 10.0	EC000897

UNSPSC

UNSPSC 21.0	39121400

Environmental product compliance

EU RoHS

Fulfills EU RoHS substance requirements	Yes, No exemptions

China RoHS

Environment friendly use period (EFUP)	EFUP-E
	No hazardous substances above the limits

EU REACH SVHC

REACH candidate substance (CAS No.)	No substance above 0.1 wt%

EF3.1 Climate Change

CO2e kg	1.407 kg CO2e

Phoenix Contact 2026 © - all rights reserved
https://www.phoenixcontact.com

PHOENIX CONTACT Ltd
Halesfield 13, Telford
Shropshire, TF7 4PG
01952 681700
info@phoenixcontact.co.uk