PTPOWER 35 BU - High-current terminal block

3212065

https://www.phoenixcontact.com/gb/products/3212065

Please be informed that the data shown in this PDF document is generated from our online catalog. Please find the complete data in the user documentation. Our general terms of use for downloads are valid.

125 A
IEC

1000 V
IEC

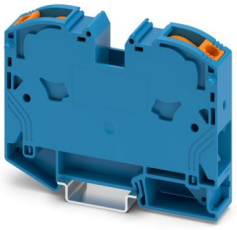

High-current terminal block, nom. voltage: 1000 V, nominal current: 125 A, number of connections: 2, connection method: PowerTurn connection, Rated cross section: 35 mm^2, cross section: 2.5 mm^2 - 35 mm^2, mounting type: NS 35/15, color: blue

Your advantages

- Quick and easy connection is now also possible for large conductors with the high-current terminal block
- The Push-in connection terminal blocks are characterized by the system features of the CLIPLINE complete system and by easy and tool-free wiring of conductors with ferrules or solid conductors
- In addition to the testing option in the double function shaft, all terminal blocks provide an additional test pick-off
- The compact design and front connection enable wiring in a confined space

Commercial data

Item number	3212065
Packing unit	10 pc
Minimum order quantity	10 pc
Sales key	BE2211
Product key	BE2211
GTIN	4046356726023
Weight per piece (including packing)	92 g
Weight per piece (excluding packing)	83.49 g
Customs tariff number	85369010
Country of origin	TR

Technical data

Product properties

Product type	High current terminal block
Number of connections	2
Number of rows	1
Potentials	1

Insulation characteristics

Overvoltage category	III
Degree of pollution	3

Electrical properties

Rated surge voltage	8 kV
Maximum power dissipation for nominal condition	4.06 W

Connection data

Number of connections per level	2
Nominal cross section	35 mm²
Rated cross section AWG	2
Connection method	PowerTurn connection
Stripping length	25 mm
Conductor cross-section rigid	2.5 mm² ... 35 mm²
Cross section AWG	12 ... 2 (converted acc. to IEC)
Conductor cross-section flexible	2.5 mm² ... 35 mm²
Conductor cross-section, flexible [AWG]	12 ... 2 (converted acc. to IEC)
Conductor cross-section flexible (ferrule without plastic sleeve)	2.5 mm² ... 35 mm²
Flexible conductor cross-section (ferrule with plastic sleeve)	2.5 mm² ... 35 mm²
Nominal cross section	35 mm²
Nominal current	125 A
Maximum load current	125 A (with 35 mm² conductor cross-section)
Nominal voltage	1000 V

Connection cross sections directly pluggable

Conductor cross-section rigid	2.5 mm² ... 35 mm²
Conductor cross-section, rigid [AWG]	12 ... 2 (converted acc. to IEC)
Conductor cross-section flexible (ferrule without plastic sleeve)	2.5 mm² ... 35 mm²
Flexible conductor cross-section (ferrule with plastic sleeve)	2.5 mm² ... 35 mm²

Ex data

Rated data (ATEX/IECEx)

Identification	Ⓔx II 2 GD Ex eb IIC Gb
Operating temperature range	-60 °C ... 110 °C

Ex-certified accessories	1206612 SZF 3-1,0X5,5
	1201662 E/AL-NS 35
List of bridges	Plug-in bridge / FBS 2-16 / 3005963
Bridge data	89 A (25 mm²)
Ex temperature increase	40 K (120 A/35 mm²)
for bridging with bridge	690 V
Rated insulation voltage	660 V
output	(Permanent)

Ex level General

Rated voltage	690 V
Rated current	109 A
Maximum load current	109 A
Contact resistance	0.16 mΩ

Ex connection data General

Ferrule length	25 mm
Stripping length	25 mm
Nominal cross section	35 mm²
Rated cross section AWG	2
Connection capacity rigid	2.5 mm² ... 35 mm²
Connection capacity AWG	12 ... 2
Conductor cross-section flexible, with ferrule without plastic sleeve min.	6 mm²
Conductor cross-section flexible, with ferrule without plastic sleeve max.	35 mm²

Dimensions

Width	16 mm
Height	91.6 mm
Depth on NS 35/7,5	69.8 mm
Depth on NS 35/15	77.3 mm

Material specifications

Color	blue (RAL 5015)
Flammability rating according to UL 94	V0
Insulating material group	I
Insulating material	PA
Static insulating material application in cold	-60 °C
Relative insulation material temperature index (Elec., UL 746 B)	130 °C
Fire protection for rail vehicles (DIN EN 45545-2) R22	HL 1 - HL 3
Fire protection for rail vehicles (DIN EN 45545-2) R23	HL 1 - HL 3
Fire protection for rail vehicles (DIN EN 45545-2) R24	HL 1 - HL 3
Fire protection for rail vehicles (DIN EN 45545-2) R26	HL 1 - HL 3
Surface flammability NFPA 130 (ASTM E 162)	passed
Specific optical density of smoke NFPA 130 (ASTM E 662)	passed

Smoke gas toxicity NFPA 130 (SMP 800C)	passed

Mechanical properties

Mechanical data

Open side panel	No

Environmental and real-life conditions

Ambient conditions

Ambient temperature (operation)	-60 °C ... 110 °C (Operating temperature range incl. self-heating; for max. short-term operating temperature, see RTI Elec.)
Ambient temperature (storage/transport)	-25 °C ... 60 °C (for a short time, not exceeding 24 h, -60 °C to +70 °C)
Ambient temperature (assembly)	-5 °C ... 70 °C
Ambient temperature (actuation)	-5 °C ... 70 °C
Permissible humidity (operation)	20 % ... 90 %
Permissible humidity (storage/transport)	30 % ... 70 %

Mounting

Mounting type	NS 35/15

Drawings

Schematic diagram

PTPOWER



AGK 10-PTPOWER	**0,5 mm² ... 16 mm²**	**18 mm**
PTPOWER 35	**2,5 mm² ... 35 mm²**	**25 mm**
PTPOWER 50	**10 mm² ... 50 mm²**	**32 mm**
PTPOWER 95	**25 mm² ... 95 mm²**	**40 mm**
PTPOWER 185	**95 mm² ... 185 mm²**	**40 mm**

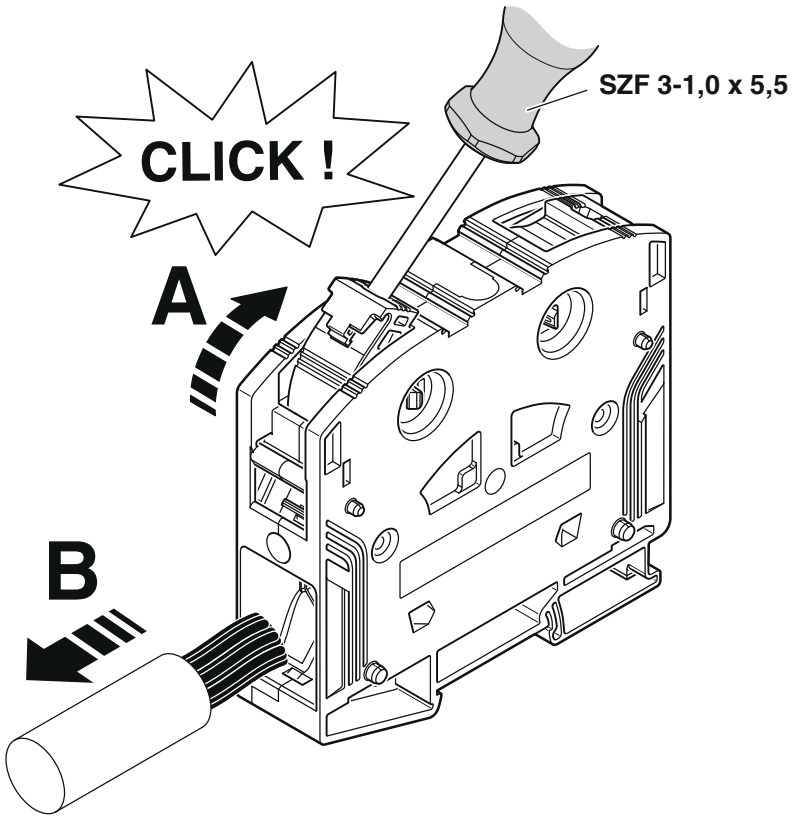

Circuit diagram

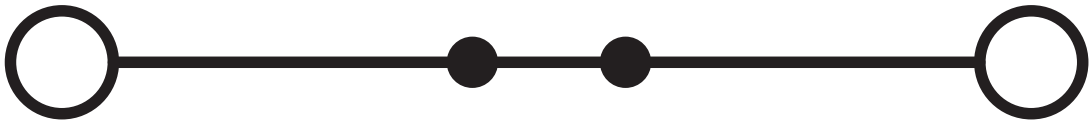

Approvals

To download certificates, visit the product detail page: https://www.phoenixcontact.com/gb/products/3212065

CSA
Approval ID: 13631

	Nominal voltage U_N	Nominal current I_N	Cross section AWG	Cross section mm^2
B				
	600 V	115 A	14 - 2	-
C				
	1000 V	115 A	14 - 2	-

EAC
Approval ID: RU C-DE.BL08.B.00644

DNV
Approval ID: TAE00000Z9

cUL Recognized
Approval ID: E60425

	Nominal voltage U_N	Nominal current I_N	Cross section AWG	Cross section mm^2
C				
	1000 V	115 A	14 - 2	-

UL Recognized
Approval ID: E60425

	Nominal voltage U_N	Nominal current I_N	Cross section AWG	Cross section mm^2
E				
	1000 V	115 A	14 - 2	-

CCC
Approval ID: 2020322313000630

UKCA-EX
Approval ID: CML 22UKEX1227U

IECEx
Approval ID: IECExSEV14.0013U

	Nominal voltage U_N	Nominal current I_N	Cross section AWG	Cross section mm^2
keine				

Only rigid conductors	690 V	109 A	-	2.5 - 35
multi-stranded with ferrule	690 V	109 A	-	6 - 35

ATEX
Approval ID: SEV14ATEX0156U

	Nominal voltage U_N	Nominal current I_N	Cross section AWG	Cross section mm^2
keine				
Only rigid conductors	690 V	109 A	-	2.5 - 35
multi-stranded with ferrule	690 V	109 A	-	6 - 35

EAC Ex
Approval ID: KZ 7500525010101950

Classifications

ECLASS

ECLASS-13.0	27250101
ECLASS-15.0	27250101

ETIM

ETIM 10.0	EC000897

UNSPSC

UNSPSC 21.0	39121400

Environmental product compliance

EU RoHS

Fulfills EU RoHS substance requirements	Yes, No exemptions

China RoHS

Environment friendly use period (EFUP)	EFUP-E
	No hazardous substances above the limits

EU REACH SVHC

REACH candidate substance (CAS No.)	No substance above 0.1 wt%

EF3.1 Climate Change

CO2e kg	1.211 kg CO2e

Phoenix Contact 2026 © - all rights reserved
https://www.phoenixcontact.com

PHOENIX CONTACT Ltd
Halesfield 13, Telford
Shropshire, TF7 4PG
01952 681700
info@phoenixcontact.co.uk