UK 10,3-HESI N - Fuse holder

3048386

https://www.phoenixcontact.com/gb/products/3048386

Please be informed that the data shown in this PDF document is generated from our online catalog. Please find the complete data in the user documentation. Our general terms of use for downloads are valid.



Fuse holder, fuse type: Ceramic, fuse type: 10.3 x 38 mm, nom. voltage: 690 V AC, nominal current: 32 A, number of positions: 1, connection method: Screw connection, Rated cross section: 16 mm^2, cross section: 1 mm^2- 16 mm^2, mounting type: NS 35/7,5, NS 35/15, color: black

Your advantages

- Fuse holder for fuses up to 690 V AC
- For 10 x 38 fuse-links in accordance with IEC 60269-2
- Easy to bridge

Commercial data

Item number	3048386
Packing unit	12 pc
Minimum order quantity	12 pc
Sales key	BE1234
Product key	BE1234
GTIN	4017918976293
Weight per piece (including packing)	46.5 g
Weight per piece (excluding packing)	45.88 g
Customs tariff number	85369095
Country of origin	TN

Technical data

Notes

Order information:	Fuse-link not supplied as standard

Product properties

Product type	Fuse terminal block
Number of positions	1
Number of connections	2
Number of rows	1

Insulation characteristics

Overvoltage category	III
Degree of pollution	3

Electrical properties

Fuse type	Ceramic
Rated surge voltage	6 kV
Maximum power dissipation for nominal condition	3 W
Fuse	10.3 x 38 mm

Connection data

Number of connections per level	2
Nominal cross section	16 mm²
Connection method	Screw connection
Screw thread	M5
Tightening torque	2 Nm
Stripping length	15 mm
Internal cylindrical gage	B6
	A7
Connection in acc. with standard	IEC 60947-1 / -3
Conductor cross-section rigid	1 mm² ... 16 mm²
Cross section AWG	18 ... 6 (converted acc. to IEC)
Conductor cross-section flexible	1 mm² ... 16 mm²
Conductor cross-section, flexible [AWG]	18 ... 6 (converted acc. to IEC)
Conductor cross-section flexible (ferrule without plastic sleeve)	1.5 mm² ... 10 mm²
Flexible conductor cross-section (ferrule with plastic sleeve)	1.5 mm² ... 10 mm²
2 conductors with same cross section, rigid	1 mm² ... 6 mm²
2 conductors with same cross section, flexible	1 mm² ... 6 mm²
2 conductors with same cross section, flexible, with ferrule without plastic sleeve	1.5 mm² ... 4 mm²
2 conductors with the same cross section, flexible, with TWIN ferrule with plastic sleeve	1.5 mm² ... 4 mm²
Nominal cross section	16 mm²
Nominal current	32 A (the current and voltage are determined by the fuse)

Maximum load current	32 A (the current and voltage are determined by the fuse)
Nominal voltage	690 V AC (the current and voltage are determined by the fuse)

Dimensions

Dimensional drawing	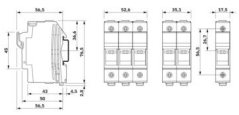
Width	17.6 mm
Height	79.3 mm
Depth on NS 35/7,5	64 mm
Depth on NS 35/15	71.5 mm

Material specifications

Color	black (RAL 9005)
Flammability rating according to UL 94	V2
Insulating material group	III
Insulating material	PA
Relative insulation material temperature index (Elec., UL 746 B)	125 °C

Mechanical properties

Mechanical data

Open side panel	No

Environmental and real-life conditions

Ambient conditions

Ambient temperature (operation)	-50 °C ... 85 °C (max. short-term operating temperature RTI Elec.)
Ambient temperature (storage/transport)	-25 °C ... 55 °C (for a short time, not exceeding 24 h, -60 °C to +70 °C)
Ambient temperature (assembly)	-5 °C ... 70 °C
Ambient temperature (actuation)	-5 °C ... 70 °C
Permissible humidity (operation)	20 % ... 90 %
Permissible humidity (storage/transport)	30 % ... 70 %

Standards and regulations

Connection in acc. with standard	IEC 60947-1 / -3

Mounting

Mounting type	NS 35/7,5
	NS 35/15

Drawings

Dimensional drawing

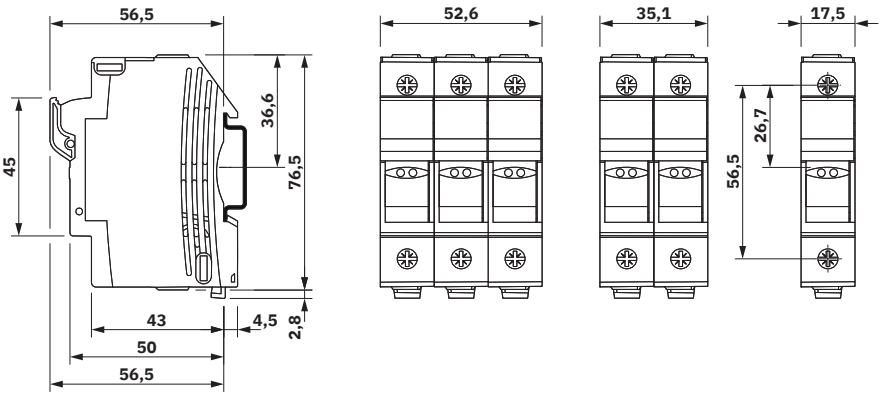

Schematic diagram

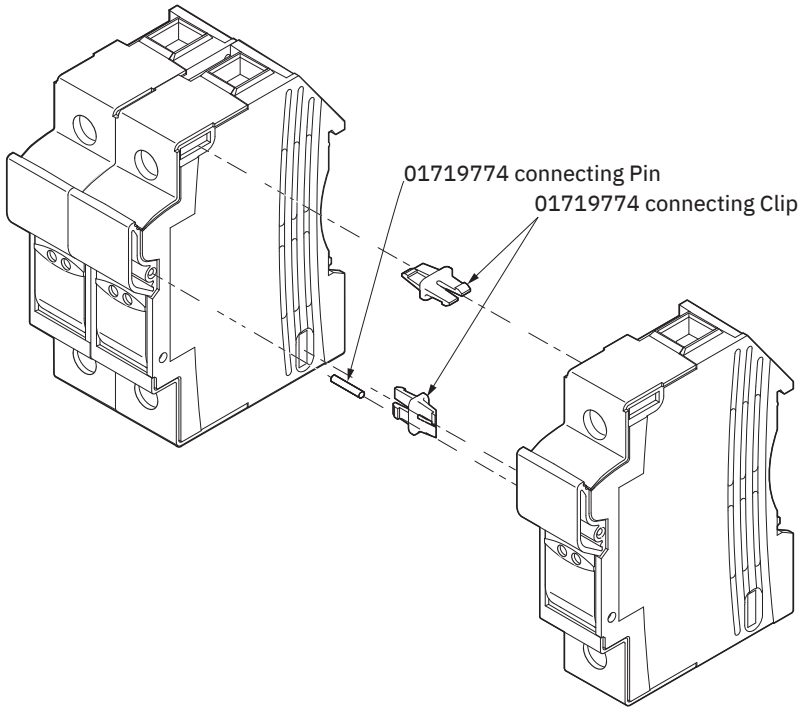

Circuit diagram

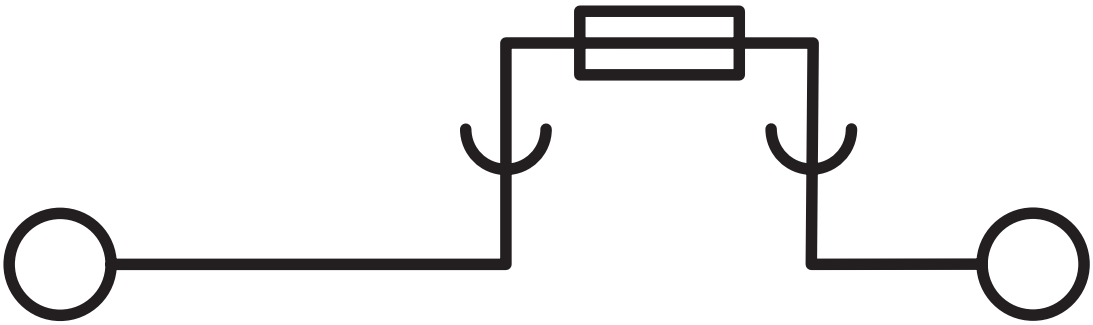

Approvals

To download certificates, visit the product detail page: https://www.phoenixcontact.com/gb/products/3048386

UL Recognized
Approval ID: E244294

CSA
Approval ID: 274201

CCC
Approval ID: 2026010302852935

CCC
Approval ID: 2026010308852936

Classifications

ECLASS

ECLASS-13.0	27250113
ECLASS-15.0	27250113

ETIM

ETIM 10.0	EC000899

UNSPSC

UNSPSC 21.0	39121400

Environmental product compliance

EU RoHS

Fulfills EU RoHS substance requirements	Yes, No exemptions

China RoHS

Environment friendly use period (EFUP)	EFUP-E
	No hazardous substances above the limits

EU REACH SVHC

REACH candidate substance (CAS No.)	No substance above 0.1 wt%

Phoenix Contact 2026 © - all rights reserved
https://www.phoenixcontact.com

PHOENIX CONTACT Ltd
Halesfield 13, Telford
Shropshire, TF7 4PG
01952 681700
info@phoenixcontact.co.uk