UTMED 4-PE - Protective conductor terminal block

3047478

https://www.phoenixcontact.com/gb/products/3047478

Please be informed that the data shown in this PDF document is generated from our online catalog. Please find the complete data in the user documentation. Our general terms of use for downloads are valid.





Protective conductor terminal block, number of connections: 2, connection method: Screw connection, cross section: 0.14 mm^2 - 6 mm^2, mounting type: NS 35/7,5, NS 35/15, color: green-yellow

Your advantages

- Globally recognized: Internationally proven screw connection
- Maintenance-free and vibration-resistant thanks to the patented Reakdyn principle
- Meet the requirements of DIN EN 60947-7-2 or IEC 60947-7-2 for protective conductor connections
- High level of safety thanks to the low-resistance connection to the ground potential via the top-hat rail
- Direct contacting with the DIN rail enables fast, error-free grounding without additional wiring effort.
- Full flexibility thanks to the standardized CLIPLINE complete bridging, marking, and testing accessories

Commercial data

Item number	3047478
Packing unit	50 pc
Minimum order quantity	50 pc
Sales key	BE1133
Product key	BE1133
GTIN	4046356661928
Weight per piece (including packing)	16.498 g
Weight per piece (excluding packing)	16.498 g
Customs tariff number	85369010
Country of origin	PL

Technical data

Product properties

Product type	Ground terminal block
Product family	UTMED
Number of connections	2
Number of rows	1

Insulation characteristics

Overvoltage category	III
Degree of pollution	3

Electrical properties

Rated surge voltage	6 kV

Connection data

Grounding foot	Yes
Number of connections per level	2
Nominal cross section	4 mm²

Level 1 above 1 below 1

Connection method	Screw connection
Screw thread	M3
Note	Please observe the current carrying capacity of the DIN rails.
Tightening torque	0.6 ... 0.8 Nm
Stripping length	9 mm
Internal cylindrical gage	A4
Connection in acc. with standard	IEC 60947-7-2
Conductor cross-section rigid	0.14 mm² ... 6 mm²
Cross section AWG	26 ... 10 (converted acc. to IEC)
Conductor cross-section flexible	0.14 mm² ... 6 mm²
Conductor cross-section, flexible [AWG]	26 ... 10 (converted acc. to IEC)
Conductor cross-section flexible (ferrule without plastic sleeve)	0.14 mm² ... 4 mm²
Flexible conductor cross-section (ferrule with plastic sleeve)	0.14 mm² ... 4 mm²

Dimensions

Width	6.2 mm
End cover width	2.2 mm
Height	66 mm
Depth on NS 35/7,5	49.5 mm
Depth on NS 35/15	57 mm

Material specifications

Color	green-yellow
Flammability rating according to UL 94	V0

Insulating material group	I
Insulating material	PA
Static insulating material application in cold	-60 °C
Temperature index of insulation material (DIN EN 60216-1 (VDE 0304-21))	130 °C
Relative insulation material temperature index (Elec., UL 746 B)	130 °C
Fire protection for rail vehicles (DIN EN 45545-2) R22	HL 1 - HL 3
Fire protection for rail vehicles (DIN EN 45545-2) R23	HL 1 - HL 3
Fire protection for rail vehicles (DIN EN 45545-2) R24	HL 1 - HL 3
Fire protection for rail vehicles (DIN EN 45545-2) R26	HL 1 - HL 3
Calorimetric heat release NFPA 130 (ASTM E 1354)	28 MJ/kg
Surface flammability NFPA 130 (ASTM E 162)	passed
Specific optical density of smoke NFPA 130 (ASTM E 662)	passed
Smoke gas toxicity NFPA 130 (SMP 800C)	passed

Mechanical properties

Mechanical data

Open side panel	Yes

Environmental and real-life conditions

Oscillation/broadband noise

Specification	DIN EN 50155 (VDE 0115-200):2018-05
Spectrum	Long life test category 2, bogie-mounted
Frequency	f_1 = 5 Hz to f_2 = 250 Hz
ASD level	6.12 $(m/s^2)^2/Hz$
Acceleration	3.12g
Test duration per axis	5 h
Test directions	X-, Y- and Z-axis

Shocks

Pulse shape	Half-sine
Acceleration	30g
Shock duration	18 ms
Number of shocks per direction	3
Test directions	X-, Y- and Z-axis (pos. and neg.)

Ambient conditions

Ambient temperature (operation)	-60 °C ... 110 °C (Operating temperature range incl. self-heating; for max. short-term operating temperature, see RTI Elec.)
Ambient temperature (storage/transport)	-25 °C ... 60 °C (for a short time, not exceeding 24 h, -60 °C to +70 °C)
Ambient temperature (assembly)	-5 °C ... 70 °C
Ambient temperature (actuation)	-5 °C ... 70 °C
Permissible humidity (operation)	20 % ... 90 %
Permissible humidity (storage/transport)	30 % ... 70 %

Standards and regulations

Connection in acc. with standard	IEC 60947-7-2

Mounting

Mounting type	NS 35/7,5
	NS 35/15

Drawings

Circuit diagram

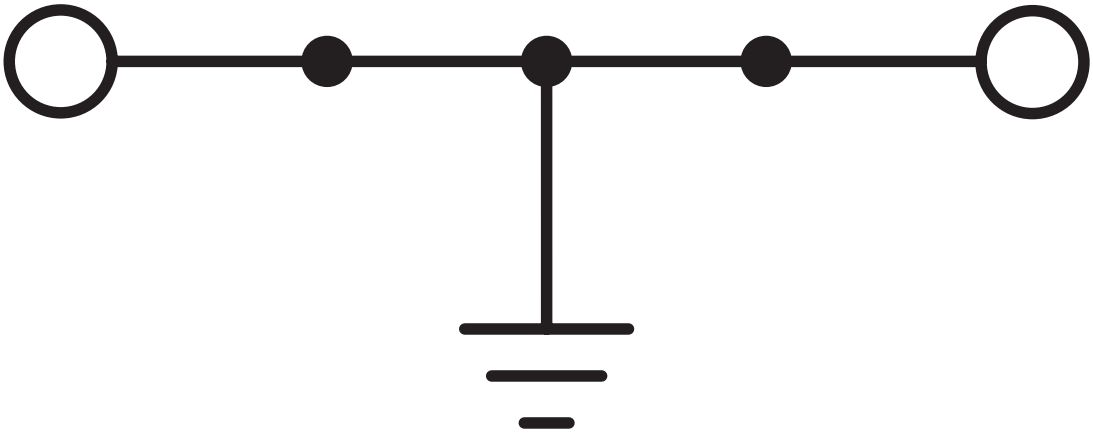

Circuit diagram

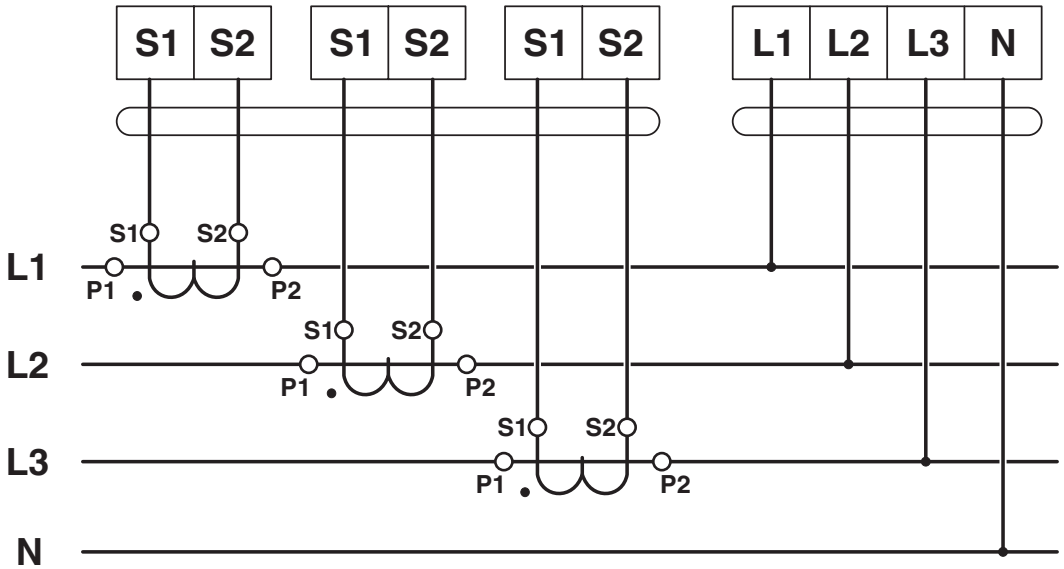

Circuit diagram

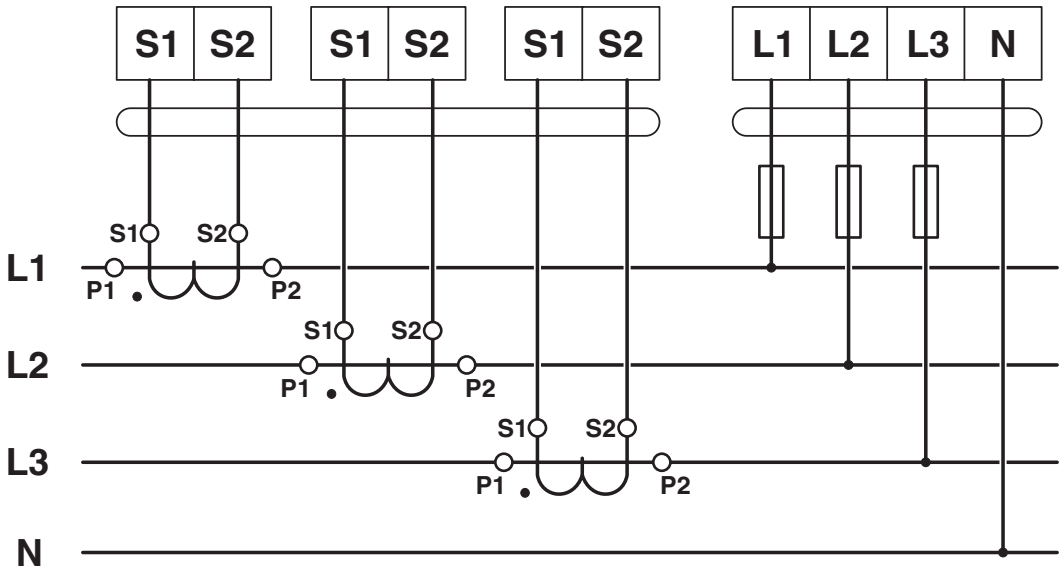

Approvals

To download certificates, visit the product detail page: https://www.phoenixcontact.com/gb/products/3047478

EAC
Approval ID: KZ7500651131219505

cULus Recognized
Approval ID: E60425

	Nominal voltage U_N	Nominal current I_N	Cross section AWG	Cross section mm^2
B				
	-	-	26 - 10	-
C				
	-	-	26 - 10	-
D				
	-	-	26 - 10	-

CSA
Approval ID: 13631

	Nominal voltage U_N	Nominal current I_N	Cross section AWG	Cross section mm^2
keine				
	-	-	26 - 10	-

Classifications

ECLASS

ECLASS-13.0	27250109
ECLASS-15.0	27250109

ETIM

ETIM 10.0	EC000902

UNSPSC

UNSPSC 21.0	39121400

Environmental product compliance

EU RoHS

Fulfills EU RoHS substance requirements	Yes
Exemption	6(c)

China RoHS

Environment friendly use period (EFUP)	EFUP-50
	An article-related China RoHS declaration table can be found in the download area for the respective article under "Manufacturer declaration". For all articles with EFUP-E, no China RoHS declaration table issued and required.

EU REACH SVHC

REACH candidate substance (CAS No.)	Lead(CAS: 7439-92-1)
SCIP	265c0a47-ac99-4e3c-9762-f241d43ffc4a

EF3.1 Climate Change

CO2e kg	0.041 kg CO2e

Phoenix Contact 2026 © - all rights reserved
https://www.phoenixcontact.com

PHOENIX CONTACT Ltd
Halesfield 13, Telford
Shropshire, TF7 4PG
01952 681700
info@phoenixcontact.co.uk