ST 2,5-TWIN/ 1P - Feed-through terminal block

3042117

https://www.phoenixcontact.com/gb/products/3042117

Please be informed that the data shown in this PDF document is generated from our online catalog. Please find the complete data in the user documentation. Our general terms of use for downloads are valid.



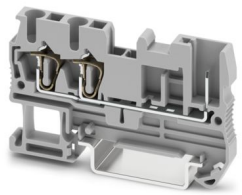

Feed-through terminal block, nom. voltage: 500 V, nominal current: 24 A, number of connections: 3, number of positions: 1, connection method: Spring-cage/plug-in connection, Rated cross section: 2.5 mm^2, 1st level connection left, cross section: 0.08 mm^2 - 4 mm^2, 1st level connection right, mounting type: NS 35/7,5, NS 35/15, color: gray

Your advantages

- The plug-in ST-COMBI spring-cage terminal block series combines the system advantages of the ST standard terminal block series with those of the COMBI plug-in system
- Tested for railway applications

Commercial data

Item number	3042117
Packing unit	50 pc
Minimum order quantity	50 pc
Sales key	BE2141
Product key	BE2141
GTIN	4017918927158
Weight per piece (including packing)	7.32 g
Weight per piece (excluding packing)	6.72 g
Customs tariff number	85369010
Country of origin	DE

Technical data

Notes

General	The max. load current must not be exceeded by the total current of all connected conductors. Current and voltage are determined by the plug used.

Product properties

Product type	Plug-in terminal block
Product family	ST
Area of application	Railway industry
	Machine building
	Plant engineering
Number of positions	1
Number of connections	3
Number of rows	1
Potentials	1

Insulation characteristics

Overvoltage category	III
Degree of pollution	3

Electrical properties

Rated surge voltage	6 kV
Maximum power dissipation for nominal condition	0.77 W

Connection data

Number of connections per level	3
Nominal cross section	2.5 mm²

1st level connection left

Connection method	Spring-cage/plug-in connection
Stripping length	8 mm ... 10 mm
Internal cylindrical gage	A3
Connection in acc. with standard	IEC 61984
Conductor cross-section rigid	0.08 mm² ... 4 mm²
Cross section AWG	28 ... 12 (converted acc. to IEC)
Conductor cross-section flexible	0.08 mm² ... 2.5 mm²
Conductor cross-section, flexible [AWG]	28 ... 14 (converted acc. to IEC)
Conductor cross-section flexible ultrasound-compressed	0.34 mm² ... 4 mm²
Conductor cross-section, flexible [AWG] ultrasound-compressed	22 ... 12 (converted acc. to IEC)
Conductor cross-section flexible (ferrule without plastic sleeve)	0.14 mm² ... 2.5 mm²
Flexible conductor cross-section (ferrule with plastic sleeve)	0.14 mm² ... 2.5 mm²
2 conductors with the same cross section, flexible, with TWIN ferrule with plastic sleeve	0.5 mm²

Nominal cross section	2.5 mm²
Nominal current	24 A (observe derating)
Maximum load current	24 A (For 4 mm² conductor cross-section, se derating curve)
Nominal voltage	500 V

Dimensions

Dimensional drawing	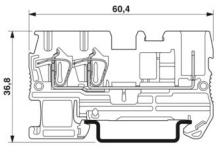
Width	5.2 mm
End cover width	2.2 mm
Height	60.5 mm
Depth on NS 35/7,5	36.5 mm
Depth on NS 35/15	44 mm

Material specifications

Color	gray (RAL 7042)
Flammability rating according to UL 94	V0
Insulating material group	I
Insulating material	PA
Static insulating material application in cold	-60 °C
Temperature index of insulation material (DIN EN 60216-1 (VDE 0304-21))	125 °C
Relative insulation material temperature index (Elec., UL 746 B)	130 °C
Fire protection for rail vehicles (DIN EN 45545-2) R22	HL 1 - HL 3
Fire protection for rail vehicles (DIN EN 45545-2) R23	HL 1 - HL 3
Fire protection for rail vehicles (DIN EN 45545-2) R24	HL 1 - HL 3
Fire protection for rail vehicles (DIN EN 45545-2) R26	HL 1 - HL 3
Calorimetric heat release NFPA 130 (ASTM E 1354)	27,5 MJ/kg
Surface flammability NFPA 130 (ASTM E 162)	passed
Specific optical density of smoke NFPA 130 (ASTM E 662)	passed
Smoke gas toxicity NFPA 130 (SMP 800C)	passed

Electrical tests

Surge voltage test

Test voltage setpoint	7.3 kV
Result	Test passed
Short-time withstand current 2.5 mm²	0.3 kA
Result	Test passed

Power-frequency withstand voltage

Test voltage setpoint	1.89 kV

Result	Test passed

Mechanical properties

Mechanical data

Open side panel	Yes

Mechanical tests

Attachment on the carrier

DIN rail/fixing support	NS 35
Test force setpoint	1 N
Result	Test passed

Environmental and real-life conditions

Needle-flame test

Time of exposure	30 s
Result	Test passed

Oscillation/broadband noise

Specification	DIN EN 50155 (VDE 0115-200):2008-03
Spectrum	Long life test category 1, class B, body mounted
Frequency	f_1 = 5 Hz to f_2 = 150 Hz
ASD level	0.964 (m/s²)²/Hz
Acceleration	0.58g
Test duration per axis	5 h
Test directions	X-, Y- and Z-axis
Result	Test passed

Shocks

Specification	DIN EN 50155 (VDE 0115-200):2008-03
Pulse shape	Half-sine
Acceleration	5g
Shock duration	30 ms
Number of shocks per direction	3
Test directions	X-, Y- and Z-axis (pos. and neg.)
Result	Test passed

Ambient conditions

Ambient temperature (operation)	-60 °C ... 100 °C (max. operating temperature range including self-heating, see derating curve)
Ambient temperature (storage/transport)	-25 °C ... 60 °C (for a short time, not exceeding 24 h, -60 °C to +70 °C)
Ambient temperature (assembly)	-5 °C ... 70 °C
Ambient temperature (actuation)	-5 °C ... 70 °C
Permissible humidity (operation)	20 % ... 90 %
Permissible humidity (storage/transport)	30 % ... 70 %

Standards and regulations

Connection in acc. with standard	IEC 61984

Mounting

Mounting type	NS 35/7,5
	NS 35/15

Drawings

Dimensional drawing

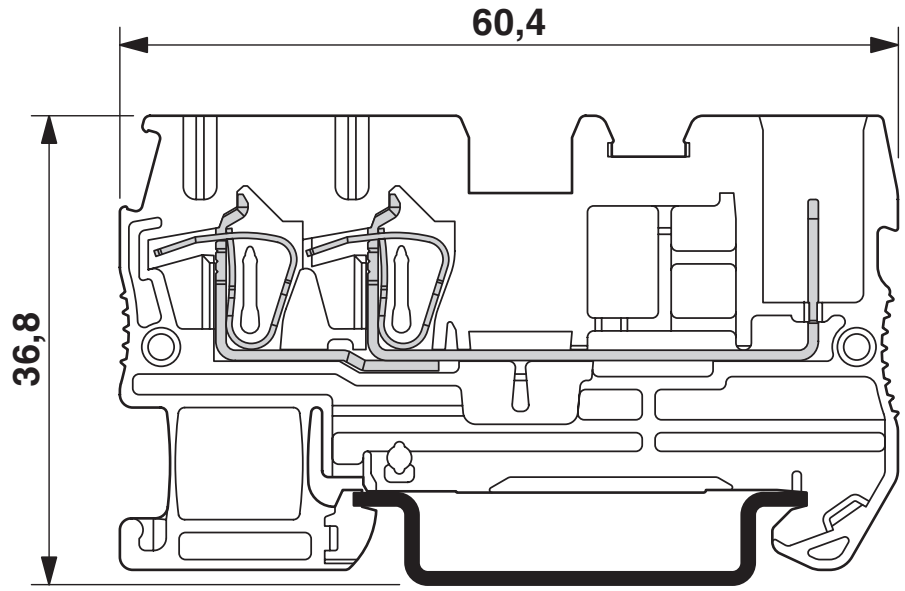

Diagram

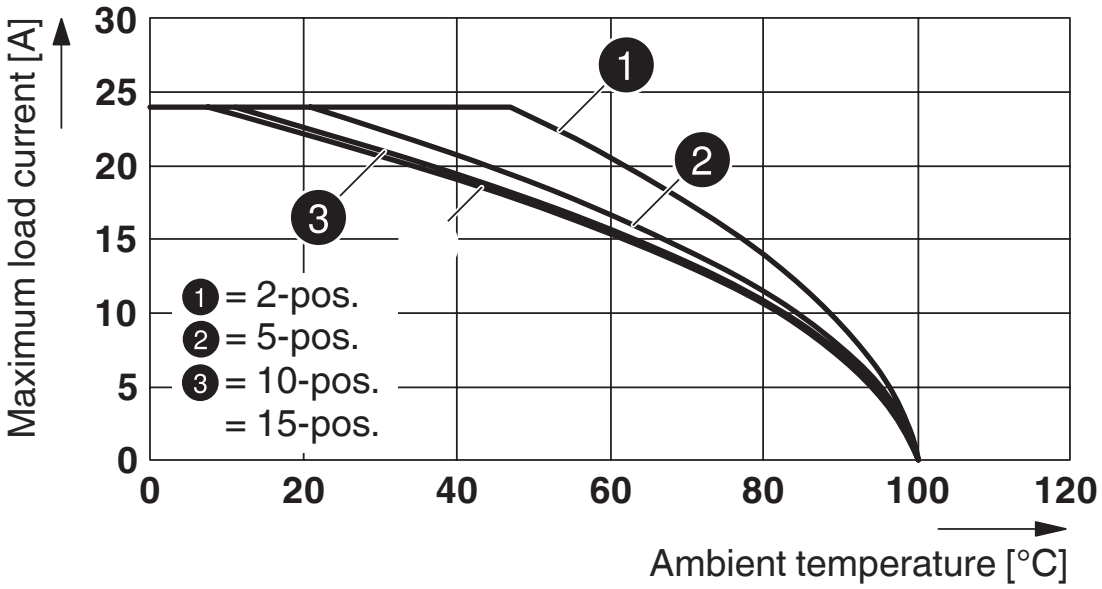

Applies to all male connector variants SP... .

Circuit diagram

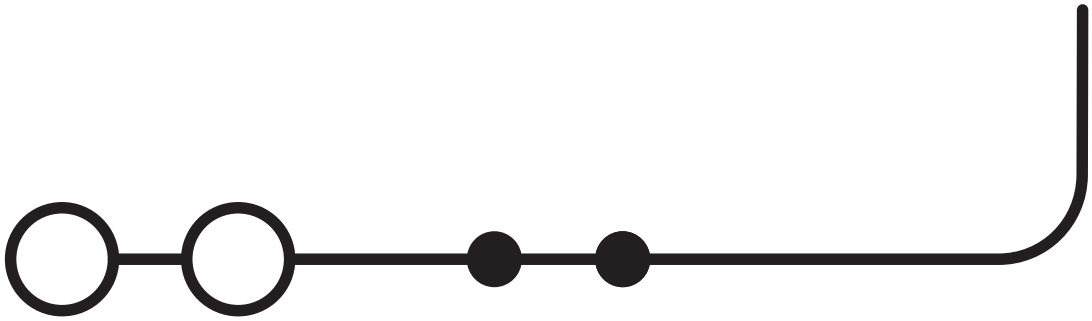

Approvals

To download certificates, visit the product detail page: https://www.phoenixcontact.com/gb/products/3042117

CSA
Approval ID: 13631

	Nominal voltage U_N	Nominal current I_N	Cross section AWG	Cross section mm^2
B				
	600 V	20 A	28 - 12	-
C				
	600 V	20 A	28 - 12	-

IECEE CB Scheme
Approval ID: DE1-62736/B1/B2

EAC
Approval ID: RU C-DE.BL08.B.00644

VDE Zeichengenehmigung
Approval ID: 40019518

	Nominal voltage U_N	Nominal current I_N	Cross section AWG	Cross section mm^2
keine				
Only flexible conductors	500 V	-	-	0.2 - 2.5
Only rigid conductors	500 V	-	-	0.2 - 4

cULus Recognized
Approval ID: E60425

	Nominal voltage U_N	Nominal current I_N	Cross section AWG	Cross section mm^2
B				
	600 V	20 A	28 - 12	-
C				
	600 V	20 A	28 - 12	-
F				
	500 V	20 A	28 - 12	-

DNV
Approval ID: TAE00001CS

Classifications

ECLASS

ECLASS-13.0	27250117
ECLASS-15.0	27250117

ETIM

ETIM 10.0	EC000897

UNSPSC

UNSPSC 21.0	39121400

Environmental product compliance

EU RoHS

Fulfills EU RoHS substance requirements	Yes, No exemptions

China RoHS

Environment friendly use period (EFUP)	EFUP-E
	No hazardous substances above the limits

EU REACH SVHC

REACH candidate substance (CAS No.)	No substance above 0.1 wt%

EF3.1 Climate Change

CO2e kg	0.035 kg CO2e

Phoenix Contact 2026 © - all rights reserved
https://www.phoenixcontact.com

PHOENIX CONTACT Ltd
Halesfield 13, Telford
Shropshire, TF7 4PG
01952 681700
info@phoenixcontact.co.uk