AB-SK 65 - Support bracket

3026489

https://www.phoenixcontact.com/gb/products/3026489

Please be informed that the data shown in this PDF document is generated from our online catalog. Please find the complete data in the user documentation. Our general terms of use for downloads are valid.

Support bracket, Bracket for busbars, set every 20 cm, width: 6.2 mm, height: 95.5 mm, number of positions: 1, color: gray, mounting type: DIN rail mounting



Your advantages

- For mounting SK shield connection clamps
- The AB-SK single-sided shield supports are particularly suitable for space-saving conductor connection for terminal blocks and devices with lateral cable entry

Commercial data

Item number	3026489
Packing unit	10 pc
Minimum order quantity	10 pc
Sales key	BE7113
Product key	BE7113
GTIN	4017918157128
Weight per piece (including packing)	18.7 g
Weight per piece (excluding packing)	18.17 g
Customs tariff number	85389099
Country of origin	PL

Technical data

Product properties

Product type	Support bracket
Number of positions	1

Electrical properties

Nominal current I_N	0 A

Dimensions

Dimensional drawing	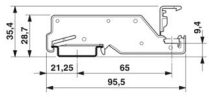
Width	6.2 mm
Height	95.5 mm
Depth on NS 35/7,5	28.7 mm
Depth on NS 35/15	36.2 mm

Material specifications

Color	gray (RAL 7042)
Material	PA
Flammability rating according to UL 94	V0
Insulating material	PA

Environmental and real-life conditions

Ambient conditions

Ambient temperature (operation)	-60 °C ... 105 °C (max. short-term operating temperature RTI Elec.)
Ambient temperature (storage/transport)	-25 °C ... 60 °C (for a short time, not exceeding 24 h, -60 °C to +70 °C)
Ambient temperature (assembly)	-5 °C ... 70 °C
Ambient temperature (actuation)	-5 °C ... 70 °C
Permissible humidity (storage/transport)	30 % ... 70 %

Mounting

Mounting type	DIN rail mounting

Drawings

Dimensional drawing

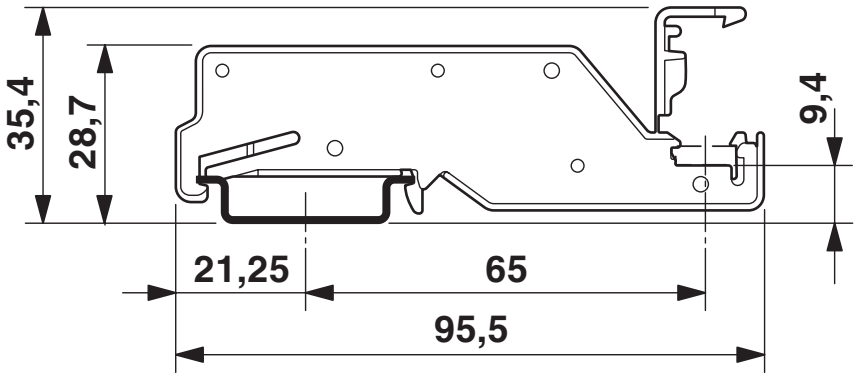

Classifications

ECLASS

ECLASS-13.0	27400607
ECLASS-15.0	27400607

ETIM

ETIM 10.0	EC001166

UNSPSC

UNSPSC 21.0	39121700

Environmental product compliance

EU RoHS

Fulfills EU RoHS substance requirements	Yes, No exemptions

China RoHS

Environment friendly use period (EFUP)	EFUP-E
	No hazardous substances above the limits

EU REACH SVHC

REACH candidate substance (CAS No.)	No substance above 0.1 wt%

EF3.1 Climate Change

CO2e kg	0.13 kg CO2e

Phoenix Contact 2026 © - all rights reserved
https://www.phoenixcontact.com

PHOENIX CONTACT Ltd
Halesfield 13, Telford
Shropshire, TF7 4PG
01952 681700
info@phoenixcontact.co.uk