E AB A 130X80X60 12MPT - Junction box

3001999

https://www.phoenixcontact.com/gb/products/3001999

Please be informed that the data shown in this PDF document is generated from our online catalog. Please find the complete data in the user documentation. Our general terms of use for downloads are valid.



Junction box, With 12 terminal blocks, 2.5 mm^2 with push-in technology, material: ABS, gray, 130 mm x 80 mm x 60 mm, type of locking: Screw-on cover

Your advantages

- Terminal box with cover and pre-assembled terminal strip
- Fast wiring without the need for additional components

Commercial data

Item number	3001999
Packing unit	1 pc
Minimum order quantity	1 pc
Sales key	BH8231
Product key	BH8231
GTIN	4055626083834
Weight per piece (including packing)	420 g
Weight per piece (excluding packing)	411.8 g
Customs tariff number	85371098
Country of origin	IN

Technical data

Product properties

Product type	Terminal box

Insulation characteristics

Protection class	II

Dimensions

Dimensional drawing	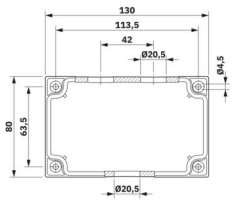
Width	130 mm
Height	80 mm
Depth	60 mm

Material specifications

Color	gray
Material	ABS
Flammability rating according to UL 94	UL-94 HB
Seal material	Silicon
Type of insulation	full protective insulation
Components	halogen-free

Mechanical properties

General

Type of locking (GRP)	Screw-on cover Phillips-Recess

Environmental and real-life conditions

Degree of protection (IP code)

Degree of protection	IP66

Ambient conditions

Ambient temperature (operation)	-20 °C ... 40 °C

Mounting

Assembly note	Screw connection in housing base

Drawings

Dimensional drawing

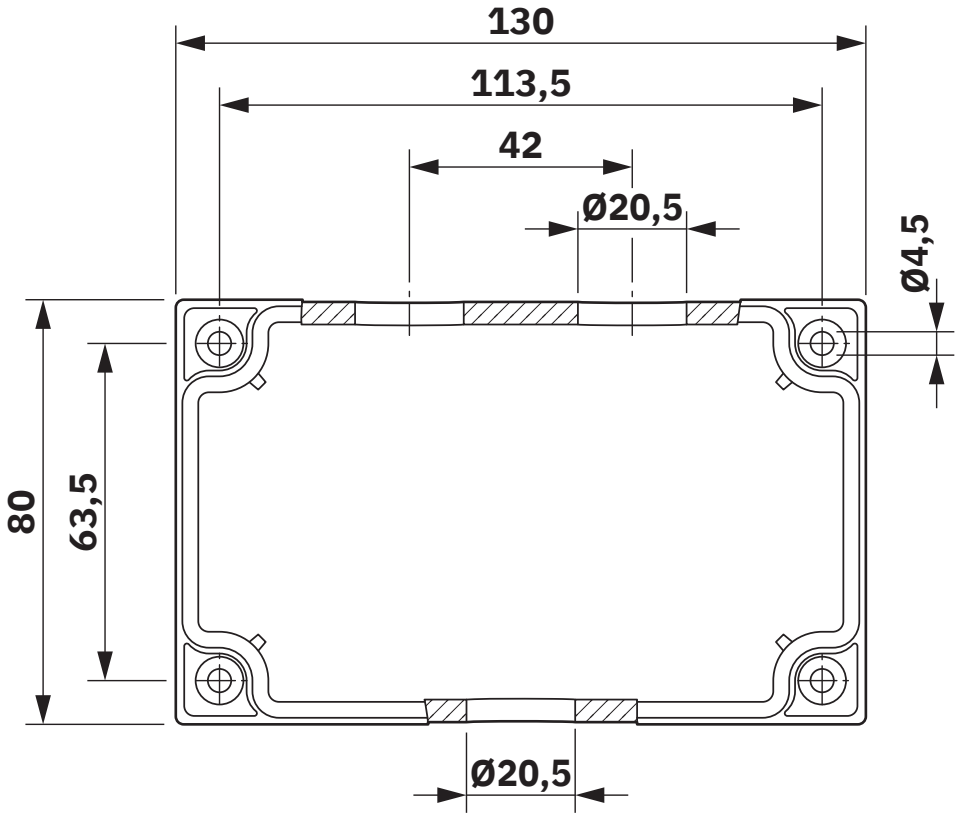

Classifications

ECLASS

ECLASS-13.0	27180101
ECLASS-15.0	27180101

ETIM

ETIM 10.0	EC000261

UNSPSC

UNSPSC 21.0	31261500

Environmental product compliance

EU RoHS

Fulfills EU RoHS substance requirements	Yes, No exemptions

China RoHS

Environment friendly use period (EFUP)	EFUP-E
	No hazardous substances above the limits

EU REACH SVHC

REACH candidate substance (CAS No.)	No substance above 0.1 wt%

Phoenix Contact 2026 © - all rights reserved
https://www.phoenixcontact.com

PHOENIX CONTACT Ltd
Halesfield 13, Telford
Shropshire, TF7 4PG
01952 681700
info@phoenixcontact.co.uk