PSR-TBUS-TP - DIN rail bus connector

2981716

https://www.phoenixcontact.com/gb/products/2981716

Please be informed that the data shown in this PDF document is generated from our online catalog. Please find the complete data in the user documentation. Our general terms of use for downloads are valid.



Blind plug for the PSR-TBUS DIN rail connector used with the modular safety relay system (PSR-SDC4)

Commercial data

Item number	2981716
Packing unit	50 pc
Minimum order quantity	50 pc
Sales key	ACHABZ
Product key	ACHABZ
GTIN	4046356099820
Weight per piece (including packing)	4.96 g
Weight per piece (excluding packing)	4.459 g
Customs tariff number	85366990
Country of origin	DE

Technical data

Product properties

Product type	DIN rail bus connector

Material specifications

Color (Housing)	yellow (RAL 1018)
Housing material	PBT

Dimensions

Width	22.5 mm

Drawings

Connection diagram

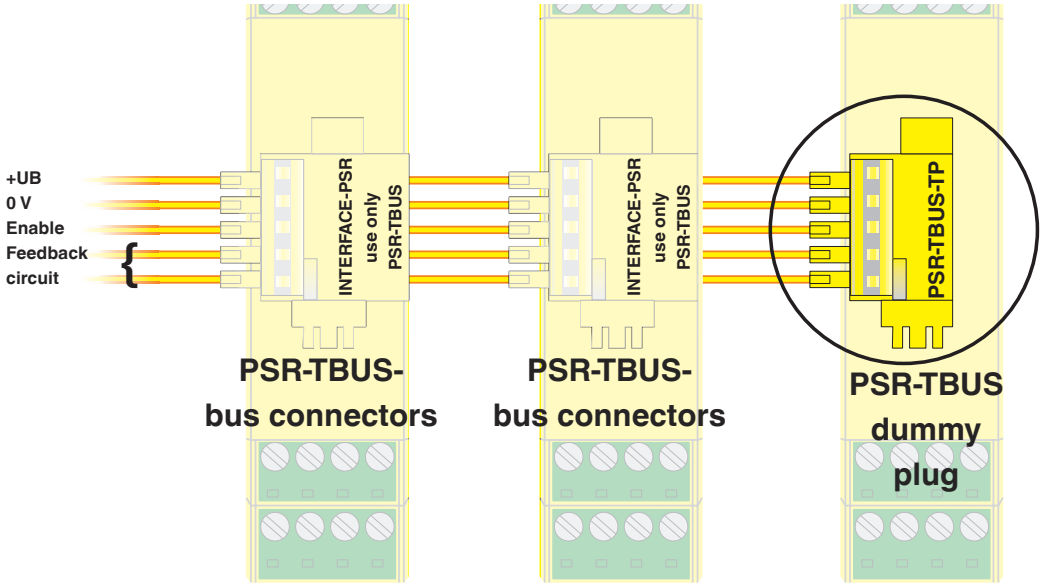

Circuit diagram

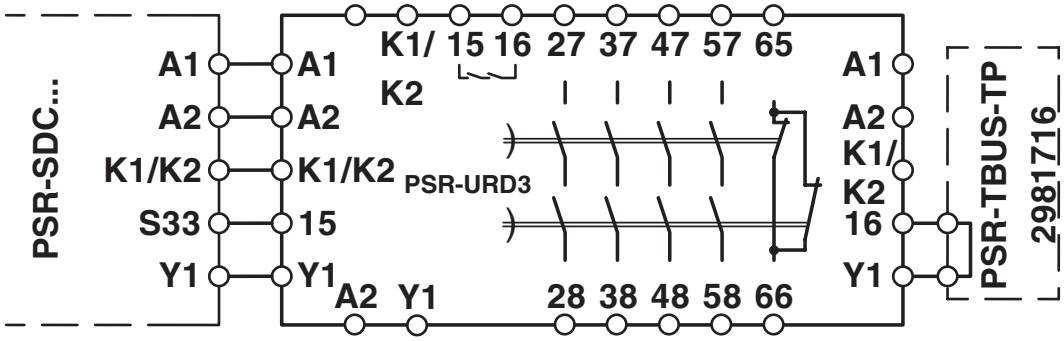

Circuit diagram

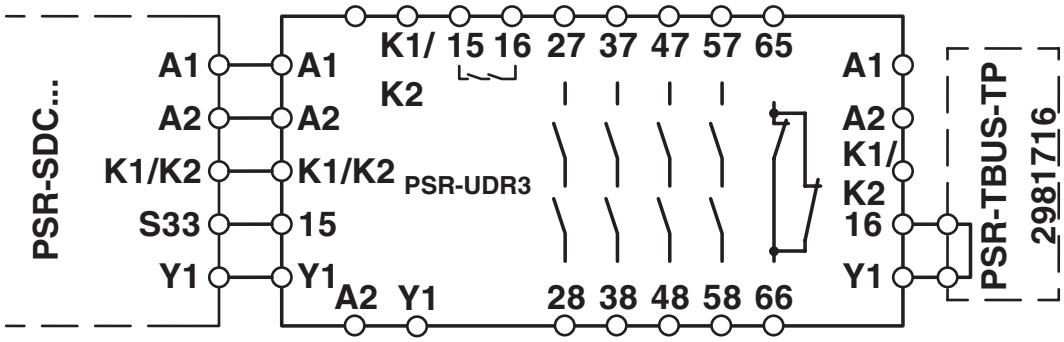

Classifications

ECLASS

ECLASS-13.0	27460201
ECLASS-15.0	27460201

ETIM

ETIM 10.0	EC002637

UNSPSC

UNSPSC 21.0	39121400

Environmental product compliance

EU RoHS

Fulfills EU RoHS substance requirements	Yes, No exemptions

China RoHS

Environment friendly use period (EFUP)	EFUP-E
	No hazardous substances above the limits

EU REACH SVHC

REACH candidate substance (CAS No.)	No substance above 0.1 wt%

Phoenix Contact 2026 © - all rights reserved
https://www.phoenixcontact.com

PHOENIX CONTACT Ltd
Halesfield 13, Telford
Shropshire, TF7 4PG
01952 681700
info@phoenixcontact.co.uk