PSR-SCP- 24UC/URM4/5X1/2X2/B - Extension module

2981033

https://www.phoenixcontact.com/gb/products/2981033

Please be informed that the data shown in this PDF document is generated from our online catalog. Please find the complete data in the user documentation. Our general terms of use for downloads are valid.



Single or two-channel contact extension, 5 N/O contacts, 1 N/C contact, 1 confirmation current path, plug-in screw terminal blocks, width: 22.5 mm

Your advantages

- 1- and 2-channel control
- Up to Cat. 4/PL e in accordance with EN ISO 13849-1, SIL 3 in accordance with EN IEC 62061, SIL 3 in accordance with IEC 61508

Commercial data

Item number	2981033
Packing unit	1 pc
Minimum order quantity	1 pc
Sales key	DNA152
Product key	DNA152
GTIN	4017918915513
Weight per piece (including packing)	208.9 g
Weight per piece (excluding packing)	205.3 g
Customs tariff number	85371098
Country of origin	DE

Technical data

Notes

Note on application

Note on application	Only for industrial use

Product properties

Product type	Safety relays
Product family	PSRclassic
Application	Extension module
Control	1 and 2 channel
Mechanical service life	10x 10^6 cycles
Relay type	Electromechanical relay with force-guided contacts in accordance with IEC/EN 61810-3

Insulation characteristics: Air clearances and creepage distances between the power circuits

Overvoltage category	III
Degree of pollution	2

Electrical properties

Maximum power dissipation for nominal condition	2.21 W
Nominal operating mode	100% operating factor

Air clearances and creepage distances between the power circuits

Rated insulation voltage	250 V AC
Rated surge voltage/insulation	Basic insulation 4 kV: between all current paths and housing Safe isolation, reinforced insulation 6 kV: between A1/A2, 11/12, 23/24, 71/72 and 33/34, 43/44, 53/54, 63/64

Supply

Rated control circuit supply voltage U_S	24 V AC/DC -15 % / +10 %
Rated control supply current I_S	typ. 81 mA (AC)
	typ. 71 mA (DC)
Power consumption at U_S	typ. 1.94 W (AC)
	typ. 1.7 W (DC)
Inrush current	typ. 175 mA (Δt = 5 ms at U_s)
Filter time	2 ms (at A1 in the event of voltage dips at U_s)
Protective circuit	Surge protection; Varistor

Output data

Relay: Enabling current paths (23/24 ... 63/64)

Number of outputs	5
Contact switching type	5 enabling current paths

Contact material	$AgSnO_2$
Switching voltage	min. 5 V AC/DC
	max. 250 V AC/DC
Switching power	min. 50 mW
Inrush current	min. 10 mA
	max. 20 A (Δt ≤ ms)
Switching capacity in accordance with IEC 60947-5-1	2.5 A (24 V (DC13))
	3 A (230 V (AC15))
Switching capacity (360/h cycles)	4 A (24 V DC)
	4 A (230 V AC)
Limiting continuous current	6 A (observe derating)
Sq. Total current	72 A^2 (observe derating)
Switching frequency	max. 1 Hz
Interrupting rating (ohmic load) max.	Observe derating and load limit curve
Maximum interrupting rating (inductive load)	Observe derating and load limit curve
Output fuse	10 A gL/gG

Relay: Signaling current path (71/72)

Number of outputs	1
Contact switching type	1 signaling current path
Contact material	$AgSnO_2$
Switching voltage	min. 5 V AC/DC
	max. 250 V AC/DC
Switching power	min. 50 mW
Inrush current	min. 10 mA
	max. 20 A (Δt ≤ ms)
Switching capacity in accordance with IEC 60947-5-1	2.5 A (24 V (DC13))
	3 A (230 V (AC15))
Switching capacity (360/h cycles)	4 A (24 V DC)
	4 A (230 V AC)
Limiting continuous current	6 A
Sq. Total current	72 A^2
Switching frequency	max. 1 Hz
Interrupting rating (ohmic load) max.	see load limit curve
Maximum interrupting rating (inductive load)	see load limit curve
Output fuse	6 A (gL/gG)

Relay: Confirmation current path (11/12)

Number of outputs	1
Contact switching type	1 confirmation current path
Contact material	$AgSnO_2$
Switching voltage	max. 250 V AC/DC
	min. 5 V AC/DC
Switching power	min. 50 mW
Inrush current	max. 20 A (Δt ≤ ms)

Switching capacity in accordance with IEC 60947-5-1	2.5 A (24 V (DC13))
	3 A (230 V (AC15))
Switching capacity (360/h cycles)	4 A (24 V DC)
	4 A (230 V AC)
Limiting continuous current	6 A
Sq. Total current	72 A^2
Switching frequency	max. 1 Hz
Interrupting rating (ohmic load) max.	see load limit curve
Maximum interrupting rating (inductive load)	see load limit curve
Output fuse	6 A (gL/gG)

Connection data

Connection technology

pluggable	yes

Conductor connection

Connection method	Screw connection
Conductor cross-section rigid	0.2 mm² ... 2.5 mm²
Conductor cross-section flexible	0.2 mm² ... 2.5 mm²
Conductor cross-section AWG	24 ... 12
Stripping length	7 mm
Screw thread	M3

Signaling

Operating voltage display	1 x LED (green)

Dimensions

Width	22.5 mm
Height	99 mm
Depth	114.5 mm

Material specifications

Color (Housing)	yellow (RAL 1018)
Housing material	PA

Characteristics

Safety data

Stop category (EN 60204-1)	0

Safety data: EN ISO 13849

Performance level (PL)	e (In conjunction with suitable evaluating device)

Safety data: IEC 61508 - High demand

Safety Integrity Level (SIL)	3 (In conjunction with suitable evaluating device)

Safety data: IEC 61508 - Low demand

Safety Integrity Level (SIL)	3 (In conjunction with suitable evaluating device)

Safety data: EN IEC 62061

Safety Integrity Level (SIL)	3 (In conjunction with suitable evaluating device)

Environmental and real-life conditions

Ambient conditions

Degree of protection	IP20
Min. degree of protection of inst. location	IP54
Ambient temperature (operation)	-20 °C ... 55 °C (observe derating)
Ambient temperature (storage/transport)	-40 °C ... 70 °C
Maximum altitude	max. 2000 m (Above sea level)
Max. permissible humidity (storage/transport)	75 % (on average, 85% infrequently, non-condensing)
Max. permissible relative humidity (operation)	75 % (on average, 85% infrequently, non-condensing)
Shock	15g
Vibration (operation)	10 Hz ... 150 Hz, 2g

Approvals

CE

Identification	CE-compliant

Standards and regulations

Air clearances and creepage distances between the power circuits

Standards/regulations	IEC 60664-1

Mounting

Mounting type	DIN rail mounting
Assembly note	See derating curve
Mounting position	vertical or horizontal

Drawings

Circuit diagram

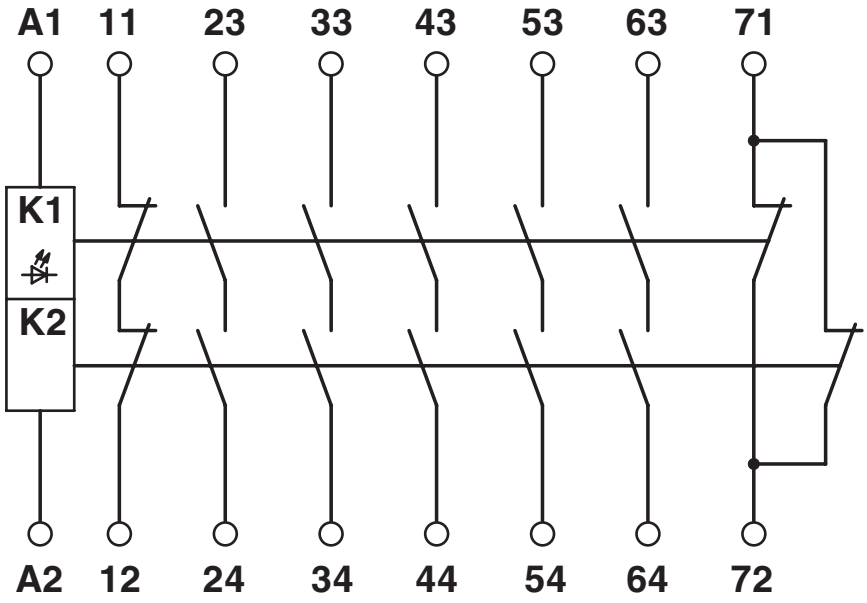

Block diagram

Circuit diagram

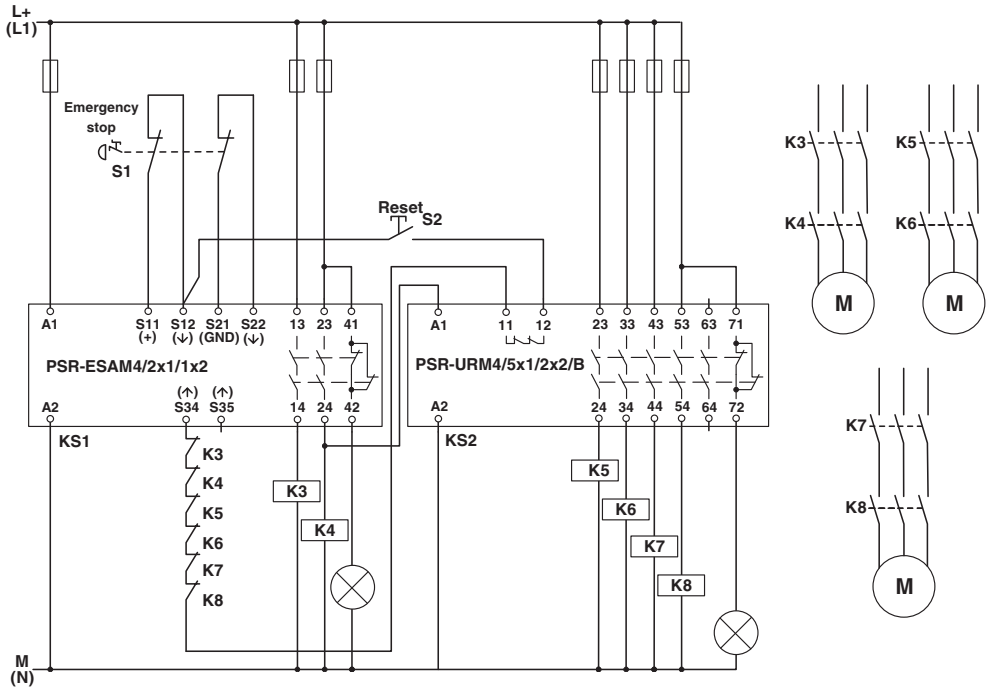

Two-channel emergency stop monitoring with contact extension

Classifications

ECLASS

ECLASS-13.0	27371819

UNSPSC

UNSPSC 21.0	39122200

Environmental product compliance

EU RoHS

Fulfills EU RoHS substance requirements	Yes
Exemption	7(a), 7(c)-I

China RoHS

Environment friendly use period (EFUP)	EFUP-50
	An article-related China RoHS declaration table can be found in the download area for the respective article under "Manufacturer declaration". For all articles with EFUP-E, no China RoHS declaration table issued and required.

EU REACH SVHC

REACH candidate substance (CAS No.)	Lead(CAS: 7439-92-1)
SCIP	65dd89ba-1ada-476f-8edb-e88423f2863d

EF3.1 Climate Change

CO2e kg	3.436 kg CO2e

Phoenix Contact 2026 © - all rights reserved
https://www.phoenixcontact.com

PHOENIX CONTACT Ltd
Halesfield 13, Telford
Shropshire, TF7 4PG
01952 681700
info@phoenixcontact.co.uk