# PLC-RSC- 24UC/21-21 - Relay module

2967073

https://www.phoenixcontact.com/gb/products/2967073

Please be informed that the data shown in this PDF document is generated from our online catalog. Please find the complete data in the user documentation. Our general terms of use for downloads are valid.



PLC-INTERFACE, consisting of basic terminal block PLC-BSC.../21 with screw connection and plug-in miniature relay with power contact, for assembly on DIN rail NS 35/7,5, 2 changeover contacts, input voltage 24 V AC/DC

## Your advantages

- Slim design
- Efficient connection to system cabling using V8 adapter
- RT III sealed relay
- Safe isolation between coil and contact side
- Functional plug-in bridges
- Integrated input circuit and interference suppression circuit

## Commercial data

| | |
|---|---|
| Item number | 2967073 |
| Packing unit | 10 pc |
| Minimum order quantity | 10 pc |
| Sales key | DK6238 |
| Product key | DK6238 |
| GTIN | 4017918156381 |
| Weight per piece (including packing) | 73.9 g |
| Weight per piece (excluding packing) | 68.58 g |
| Customs tariff number | 85364190 |
| Country of origin | DE |

# Technical data

## Product properties

| | |
|---|---|
| Product type | Relay Module |
| Product family | PLC-INTERFACE |
| Application | Universal |
| Operating mode | 100% operating factor |
| Mechanical service life | 3x $10^7$ cycles |

### Insulation characteristics

| | |
|---|---|
| Insulation | Safe isolation: Control side / contact side |
| Overvoltage category | III |
| Pollution degree | 3 |

### Data management status

| | |
|---|---|
| Date of last data management | 06.11.2026 |

## Electrical properties

| | |
|---|---|
| Maximum power dissipation for nominal condition | 0.42 W |
| Test voltage (Winding/contact) | 4 kV AC (50 Hz, 1 min., winding/contact) |
| Test voltage (Changeover contact/changeover contact) | 2.5 kV AC (50 Hz, 1 min., changeover contact/changeover contact) |
| Rated surge voltage | 6 kV |

## Input data

### Coil side

| | |
|---|---|
| Nominal input voltage $U_N$ | 24 V AC/DC |
| Input voltage range | 20.6 V AC/DC ... 33.6 V AC/DC (20 °C) |
| Nominal voltage (plugged-in electromechanical relay) | 24 V DC |
| Drive and function | monostable |
| Drive (polarity) | polarized |
| Typical input current at $U_N$ | 17.5 mA (at $U_N$ = 24 V AC) |
| | 17.5 mA (at $U_N$ = 24 V DC) |
| Typical response time | 8 ms |
| Typical release time | 10 ms |
| Protective circuit | Bridge rectifier; Bridge rectifier |
| Operating voltage display | Yellow LED |

## Output data

### Switching

| | |
|---|---|
| Contact switching type | 2 changeover contacts |
| Type of switch contact | Single contact |
| Contact material | AgNi |
| Maximum switching voltage | 250 V AC/DC (The divider plate PLC-ATP should be installed for |

| | |
|---|---|
| | voltages larger than 250 V (L1, L2, L3) between identical terminal blocks in adjacent modules. Potential bridging is then carried out with FBST 8-PLC... or ...FBST 500...) |
| Minimum switching voltage | 5 V AC/DC (10 mA) |
| Limiting continuous current | 6 A |
| Maximum inrush current | 15 A (300 ms) |
| Min. switching current | 10 mA (5 V) |
| Interrupting rating (ohmic load) max. | 140 W (at 24 V DC) |
| | 85 W (at 48 V DC) |
| | 60 W (at 60 V DC) |
| | 44 W (at 110 V DC) |
| | 60 W (at 220 V DC) |
| | 1500 VA (for 250 V AC) |
| Switching capacity | 2 A (at 24 V, DC13) |
| | 3 A (at 24 V, AC15) |
| | 3 A (at 120 V, AC15) |
| | 0.2 A (at 250 V, DC13) |
| | 3 A (at 250 V, AC15) |

## Connection data

| | |
|---|---|
| Connection method | Screw connection |
| Stripping length | 8 mm |
| Screw thread | M3 |
| Conductor cross-section rigid | 0.14 mm² ... 2.5 mm² |
| Conductor cross-section flexible | 0.14 mm² ... 2.5 mm² |
| | 0.2 mm² ... 2.5 mm² (Single ferrule) |
| | 2x 0.5 mm² ... 1.5 mm² (TWIN ferrule) |
| Conductor cross-section AWG | 26 ... 14 |
| Tightening torque | 0.6 Nm ... 0.8 Nm |

## Dimensions

Item dimensions

| | |
|---|---|
| Width | 14 mm |
| Height | 80 mm |
| Depth | 94 mm |

## Material specifications

| | |
|---|---|
| Color | gray (RAL 7042) |
| Flammability rating according to UL 94 (Housing) | V0 (Housing) |

## Environmental and real-life conditions

Ambient conditions

| | |
|---|---|
| Degree of protection (Relay) | RT III (Relay) |
| Degree of protection (Relay base) | IP20 (Relay base) |

| | |
|---|---|
| Ambient temperature (operation) | -40 °C ... 60 °C |
| Ambient temperature (storage/transport) | -40 °C ... 85 °C |

## Approvals

CE

| | |
|---|---|
| Certificate | CE-compliant |

UKCA

| | |
|---|---|
| Certificate | UKCA-compliant |

Shipbuilding approval

| | |
|---|---|
| Certificate | TAE0000196 |

Corrosive gas test

| | |
|---|---|
| Identification | ISA-S71.04. G3 Harsh Group |
| | EN 60068-2-60 |

Shipbuilding data

| | |
|---|---|
| Temperature | D |
| Humidity | A |
| Vibration | B/C |
| EMC | B |
| Enclosure | Required protection according to the Rules shall be provided upon installation on board |

## EMC data

| | |
|---|---|
| Electromagnetic compatibility | Conformance with EMC directive |
| Low Voltage Directive | Conformance with Low Voltage Directive |

## Standards and regulations

| | |
|---|---|
| Standards/regulations | IEC 60947-5-1 |

## Mounting

| | |
|---|---|
| Mounting type | DIN rail mounting |
| Assembly note | in rows with zero spacing |
| Mounting position | any |

## Drawings

Diagram

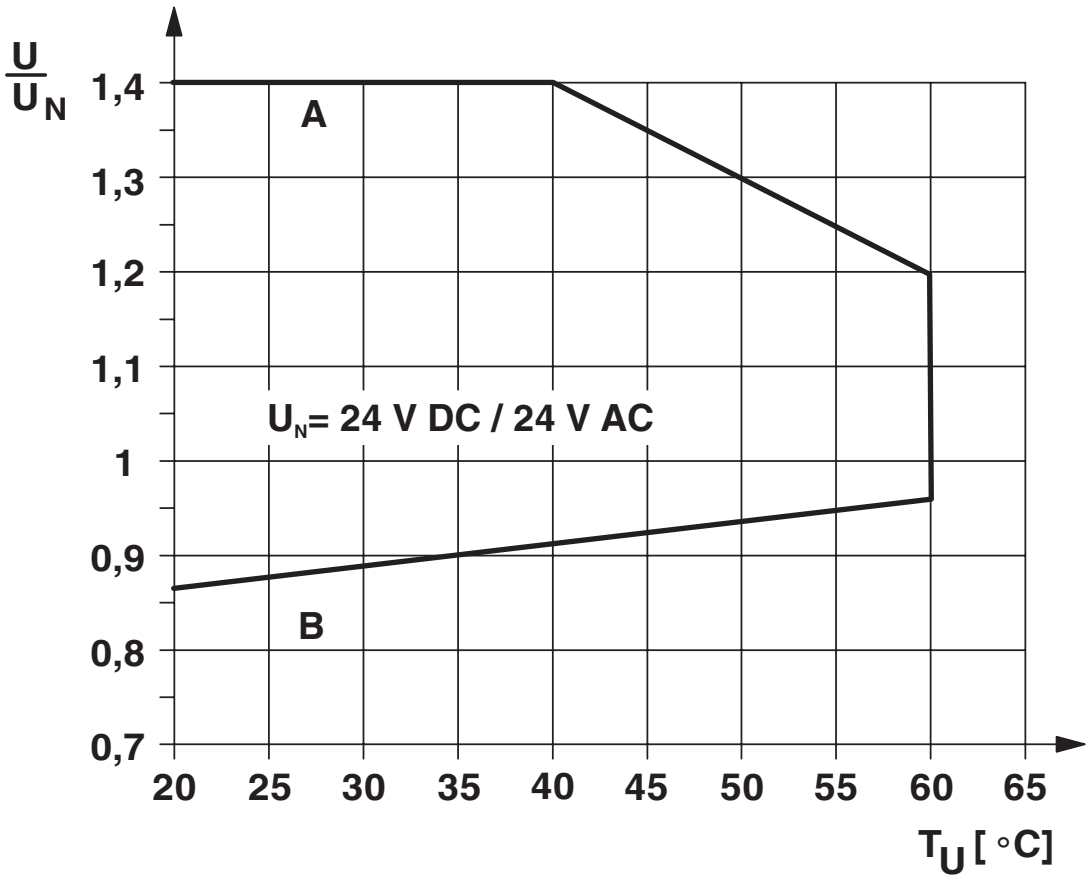


### Curve A

Maximum permissible continuous voltage $U_{max}$ with limiting continuous current on the contact side (see relevant technical data)

### Curve B

Minimum permissible operate voltage $U_{op}$ after pre-excitation (see relevant technical data)

Diagram

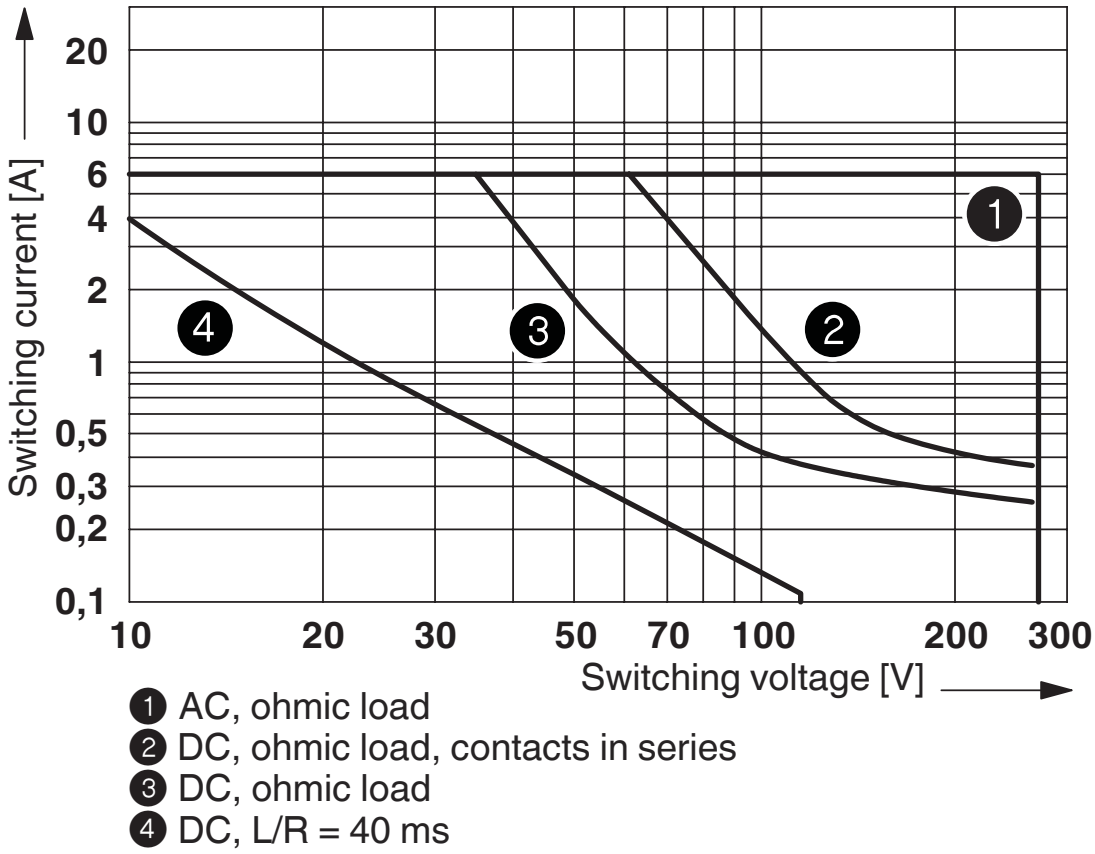


1 AC, ohmic load
2 DC, ohmic load, contacts in series
3 DC, ohmic load
4 DC, L/R = 40 ms

Interrupting rating

Diagram

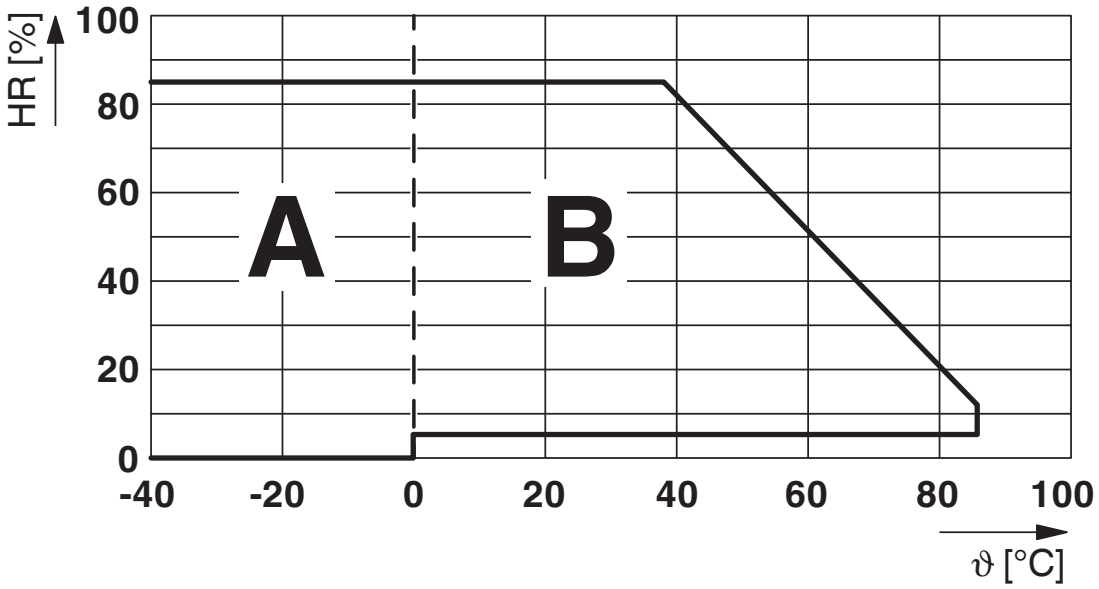


Permissible humidity for operation and storage.
The maximum permissible ambient temperature as specified in the data sheet must be observed.

Area A: Ice buildup at ambient temperatures ≤ 0°C must be prevented
Area B: Condensation at ambient temperatures > 0°C must be prevented

On 30 full days that are naturally distributed across an entire year, a humidity level of 95% is permissible at an ambient temperature ≤ 25°C.

Circuit diagram

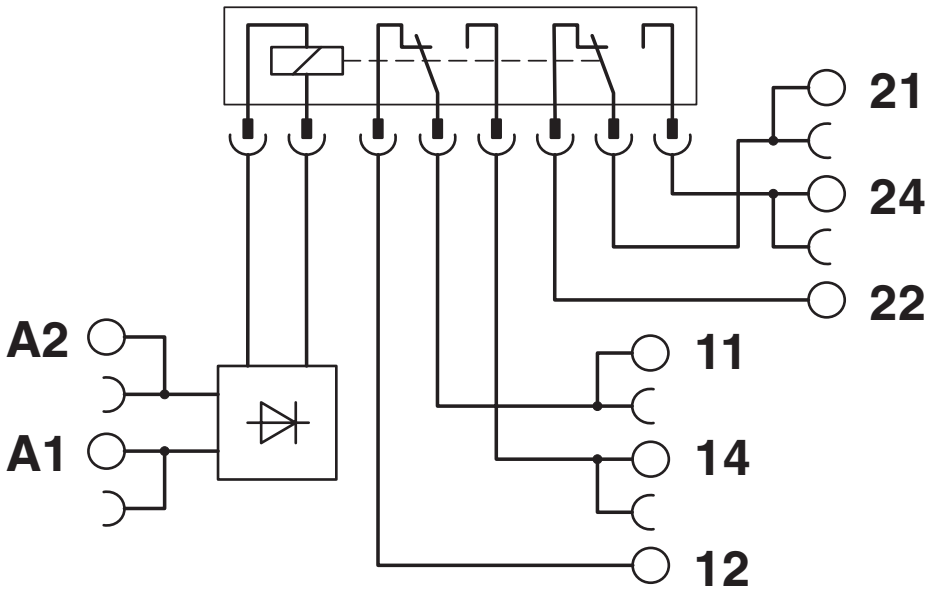

## Approvals

To download certificates, visit the product detail page: https://www.phoenixcontact.com/gb/products/2967073

**cULus Listed**
Approval ID: E140324

**cULus Listed**
Approval ID: E140324

**cULus Listed**
Approval ID: E140324

**DNV**
Approval ID: TAE0000196

## Classifications

### ECLASS

| | |
|---|---|
| ECLASS-13.0 | 27371601 |
| ECLASS-15.0 | 27371601 |

### ETIM

| | |
|---|---|
| ETIM 10.0 | EC001437 |

### UNSPSC

| | |
|---|---|
| UNSPSC 21.0 | 39122300 |

## Environmental product compliance

EU RoHS

| | |
|---|---|
| Fulfills EU RoHS substance requirements | Yes |
| Exemption | 7(a), 7(c)-I |

China RoHS

| | |
|---|---|
| Environment friendly use period (EFUP) | EFUP-50 |
| | An article-related China RoHS declaration table can be found in the download area for the respective article under "Manufacturer declaration". For all articles with EFUP-E, no China RoHS declaration table issued and required. |

EU REACH SVHC

| | |
|---|---|
| REACH candidate substance (CAS No.) | Hexahydromethylphthalic anhydride(CAS: n/a) |
| | Lead(CAS: 7439-92-1) |
| SCIP | b3bbae3d-5cad-42a6-bee7-e51d14211dea |

EF3.1 Climate Change

| | |
|---|---|
| CO2e kg | 0.744 kg CO2e |


Phoenix Contact 2026 © - all rights reserved
https://www.phoenixcontact.com



PHOENIX CONTACT Ltd
Halesfield 13, Telford
Shropshire, TF7 4PG
01952 681700
info@phoenixcontact.co.uk