PLC-ATP BK - Divider plate

2966841

https://www.phoenixcontact.com/gb/products/2966841

Please be informed that the data shown in this PDF document is generated from our online catalog. Please find the complete data in the user documentation. Our general terms of use for downloads are valid.



Separating plate, 2 mm thick, required at the start and end of a PLC terminal strip. Furthermore, it is used for: visual separation of groups, safe isolation of different voltages of neighboring PLC relays in acc. with DIN VDE 0106-101, isolation

Product description

Separating plate, 2 mm thick, required at the start and end of a PLC terminal strip. It also serves for visual separation of groups, safe isolation of different voltages of neighboring PLC relays in acc. with DIN VDE 0106-101, separation of neighboring bridges with different potentials, separation of PLC relays with voltages >250 V, color: Black

Commercial data

Item number	2966841
Packing unit	25 pc
Minimum order quantity	25 pc
Sales key	DK62Z2
Product key	DK62Z2
GTIN	4017918130664
Weight per piece (including packing)	15.617 g
Weight per piece (excluding packing)	12.151 g
Customs tariff number	85472000
Country of origin	DE

Technical data

Product properties

Product type	Divider plate
Product family	PLC-INTERFACE

Mounting

Mounting type	DIN rail mounting

Material specifications

Color	black (RAL 9005)

Dimensions

Dimensional drawing	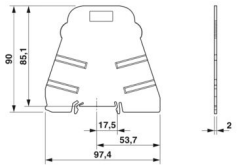
Width	2 mm
Height	97.4 mm
Depth	90 mm

Environmental and real-life conditions

Ambient conditions

Ambient temperature (storage/transport)	-40 °C ... 85 °C

Drawings

Dimensional drawing

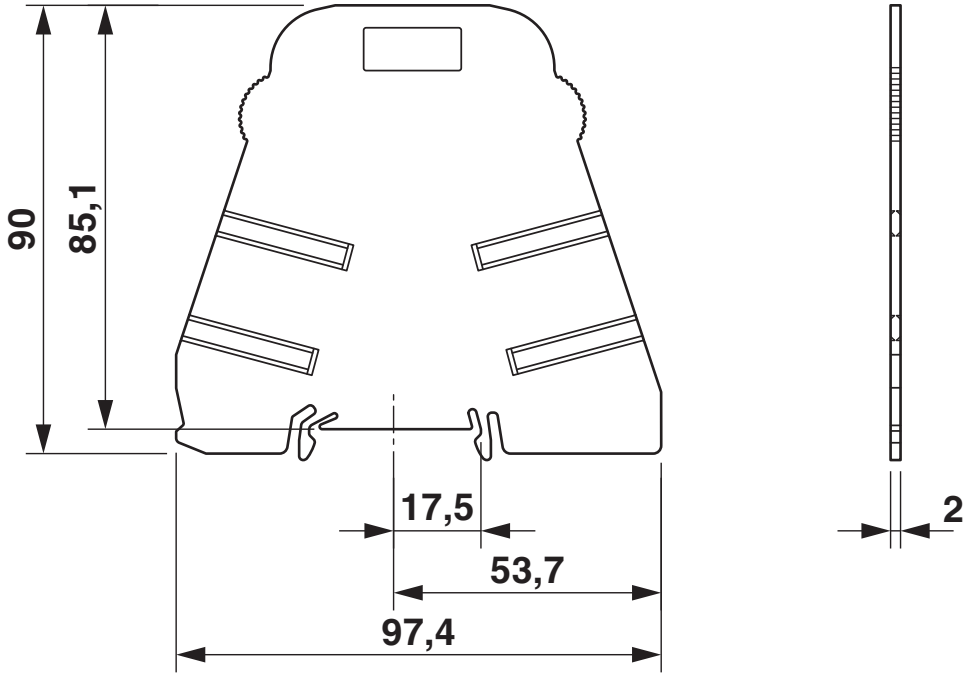

Approvals

To download certificates, visit the product detail page: https://www.phoenixcontact.com/gb/products/2966841

GL
Approval ID: 46016-03 HH

cULus Listed
Approval ID: E140324

cULus Listed
Approval ID: E140324

cULus Listed
Approval ID: E140324

cULus Listed
Approval ID: E199827

Classifications

ECLASS

ECLASS-13.0	27371692
ECLASS-15.0	27371692

ETIM

ETIM 10.0	EC002586

UNSPSC

UNSPSC 21.0	39122300

Environmental product compliance

EU RoHS

Fulfills EU RoHS substance requirements	Yes, No exemptions

China RoHS

Environment friendly use period (EFUP)	EFUP-E
	No hazardous substances above the limits

EU REACH SVHC

REACH candidate substance (CAS No.)	No substance above 0.1 wt%

EF3.1 Climate Change

CO2e kg	0.126 kg CO2e

Phoenix Contact 2026 © - all rights reserved
https://www.phoenixcontact.com

PHOENIX CONTACT Ltd
Halesfield 13, Telford
Shropshire, TF7 4PG
01952 681700
info@phoenixcontact.co.uk