OPT-24DC/ 24DC/ 2 - Miniature solid-state relay

2966595

https://www.phoenixcontact.com/gb/products/2966595

Please be informed that the data shown in this PDF document is generated from our online catalog. Please find the complete data in the user documentation. Our general terms of use for downloads are valid.

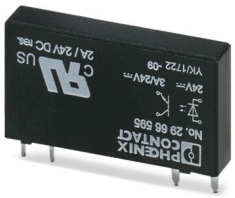

Plug-in miniature solid-state relay, power solid-state relay, 1 N/O contact, input: 24 V DC, output: 3 ... 33 V DC/3 A

Your advantages

- Vibration and shock resistant
- RT III-proof (wash-proof)
- Wear-free and durable
- Can be soldered on PCB
- Switching power of up to 24 V DC/3 A

Commercial data

Item number	2966595
Packing unit	10 pc
Minimum order quantity	10 pc
Sales key	DK69K1
Product key	DK69K1
GTIN	4017918130947
Weight per piece (including packing)	5.24 g
Weight per piece (excluding packing)	5.2 g
Customs tariff number	85364190
Country of origin	HU

Technical data

Product properties

Product type	Single solid-state relay
Set comprises	2905293 RIF-0-OPT-24DC/24DC/2
Operating mode	100% operating factor

Insulation characteristics: Standards/regulations

Insulation	Basic insulation
Overvoltage category	III
Pollution degree	2

Data management status

Date of last data management	29.10.2026

Electrical properties

Maximum power dissipation for nominal condition	0.17 W
Test voltage (Input/output)	2.5 kV (50 Hz, 1 min., input/output)

Input data

Nominal input voltage U_N	24 V DC
Input voltage range in reference to U_N	0.8 ... 1.2
Input voltage range	19.2 V DC ... 28.8 V DC
Switching threshold "0" signal in reference to U_N	0.4
Switching threshold "1" signal in reference to U_N	0.7
Typical input current at U_N	7 mA
Typical response time	20 µs (at U_N)
Typical turn-off time	300 µs (at U_N)
Transmission frequency	300 Hz

Output data

Contact switching type	1 N/O contact
Design of digital output	electronic
Output voltage range	3 V DC ... 33 V DC
Limiting continuous current	3 A (see derating curve)
Maximum inrush current	15 A (10 ms)
Voltage drop at max. limiting continuous current	≤ 150 mV
Output circuit	2-conductor, floating
Protective circuit	Reverse polarity protection
	Surge protection

Dimensions

Item dimensions

Width	5 mm

Height	28 mm
Depth	15 mm

Material specifications

Color	black (RAL 9005)

Environmental and real-life conditions

Ambient conditions

Degree of protection	RT III
Ambient temperature (operation)	-25 °C ... 60 °C
Ambient temperature (storage/transport)	-25 °C ... 70 °C

Approvals

Corrosive gas test

Identification	ISA-S71.04. G3 Harsh Group
	EN 60068-2-60

Standards and regulations

Standards/regulations

Standards/regulations	IEC 60664
	EN 50178

Mounting

Assembly note	in rows with zero spacing
Mounting position	any

Drawings

Dimensional drawing

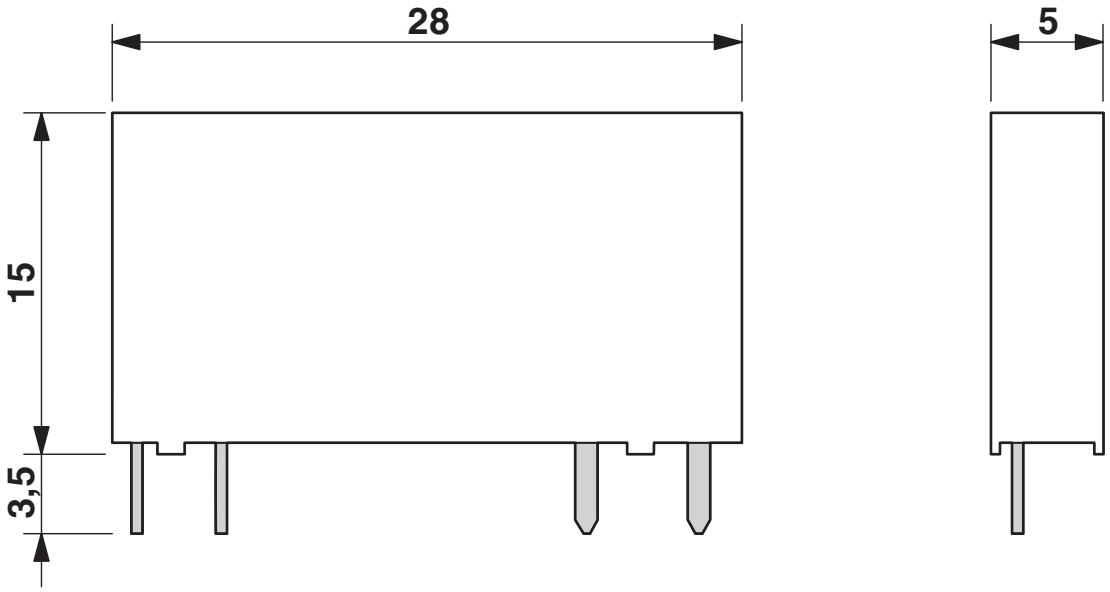

Diagram

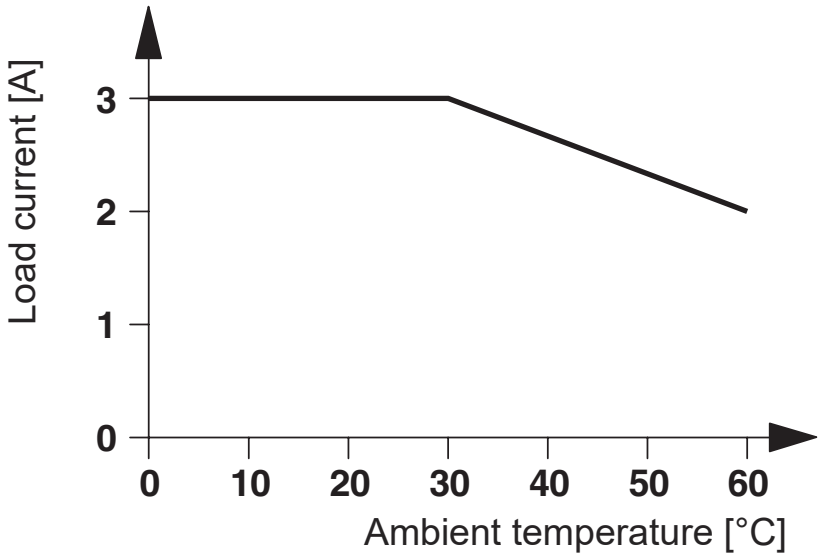

Circuit diagram

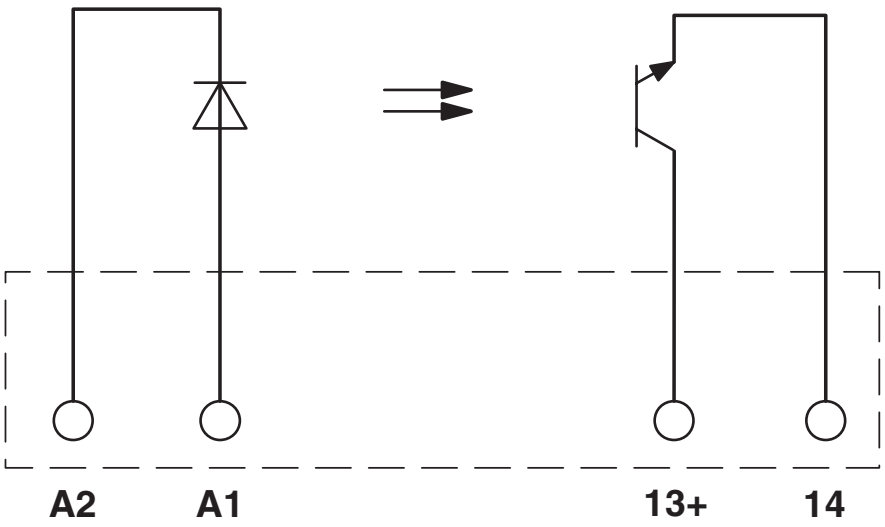

Drilling plan/solder pad geometry

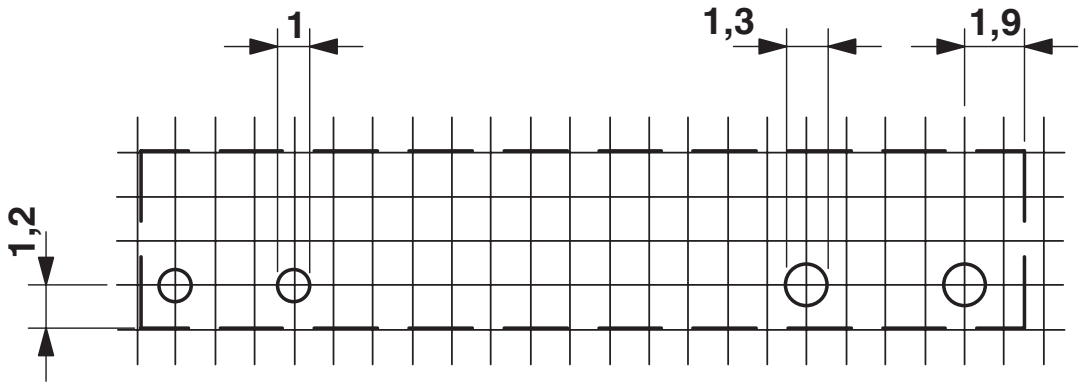

View from below

a = grid spacing 1.25 mm and 1.27 mm

Approvals

To download certificates, visit the product detail page: https://www.phoenixcontact.com/gb/products/2966595

cUL Recognized
Approval ID: FILE E 195083

UL Recognized
Approval ID: FILE E 195083

UL Recognized
Approval ID: FILE E 195083

cUL Recognized
Approval ID: FILE E 195083

GL
Approval ID: 46016-03 HH

Classifications

ECLASS

ECLASS-13.0	27371604
ECLASS-15.0	27371604

ETIM

ETIM 10.0	EC001504

UNSPSC

UNSPSC 21.0	39122300

Environmental product compliance

EU RoHS

Fulfills EU RoHS substance requirements	Yes
Exemption	7(c)-I

China RoHS

Environment friendly use period (EFUP)	EFUP-50
	An article-related China RoHS declaration table can be found in the download area for the respective article under "Manufacturer declaration". For all articles with EFUP-E, no China RoHS declaration table issued and required.

EU REACH SVHC

REACH candidate substance (CAS No.)	No substance above 0.1 wt%

EF3.1 Climate Change

CO2e kg	0.467 kg CO2e

Phoenix Contact 2026 © - all rights reserved
https://www.phoenixcontact.com

PHOENIX CONTACT Ltd
Halesfield 13, Telford
Shropshire, TF7 4PG
01952 681700
info@phoenixcontact.co.uk