PSR-SCP- 24UC/URM4/5X1/2X2 - Extension module

2963734

https://www.phoenixcontact.com/gb/products/2963734

Please be informed that the data shown in this PDF document is generated from our online catalog. Please find the complete data in the user documentation. Our general terms of use for downloads are valid.



1-channel or 2-channel contact extension, 5 N/O contacts, 1 N/C contact, 1 confirmation current path, together with basic device up to Cat. 4 PL e in accordance with EN ISO 13849 safe isolation, width: 35 mm, pluggable screw terminal block

Your advantages

- Five enabling, one signaling, and one confirmation current path
- 1- and 2-channel control
- Up to Cat. 4/PL e in accordance with EN ISO 13849-1, SIL 3 in accordance with EN IEC 62061, SIL 3 in accordance with IEC 61508

Commercial data

Item number	2963734
Packing unit	1 pc
Minimum order quantity	1 pc
Sales key	DNA152
Product key	DNA152
GTIN	4017918591120
Weight per piece (including packing)	309.5 g
Weight per piece (excluding packing)	309.5 g
Customs tariff number	85371098
Country of origin	DE

Technical data

Product properties

Product type	Safety relays
Product family	PSRclassic
Application	Extension module
Control	1 and 2 channel
Mechanical service life	approx. 10^7 cycles
Relay type	Safety relay for contact extension

Insulation characteristics: Air clearances and creepage distances between the power circuits

Overvoltage category	III
Degree of pollution	2

Times

Typ. starting time with U_s	< 20 ms (at Us / when controlled via A11/A12)
Typical release time	< 20 ms (at Us / when controlled via A11/A12)
Recovery time	< 1 s

Electrical properties

Maximum power dissipation for nominal condition	15.8 W (U_S = 26.4 V, I_L^2 = 72 A², $P_{Total\ max}$ = 1.4 W + 14.4 W)
Nominal operating mode	100% operating factor

Air clearances and creepage distances between the power circuits

Rated insulation voltage	250 V
Rated surge voltage/insulation	See data sheet, section “Insulation coordination”.

Input data

General

Rated control circuit supply voltage U_S	24 V -20 % ... +10 %
Power consumption at U_S	1 W (with DC)
	1.2 W (with AC)
Rated control supply current I_S	typ. 39 mA (per channel, DC)
	typ. 50 mA (per channel, AC)
Inrush current	typ. 200 mA (Δt = 2 ms at U_s, per channel)
Protective circuit	Surge protection; Varistor (40 V breakdown voltage)

Output data

Contact switching type	5 enabling current paths
	1 confirmation current path
	1 signaling current path
Contact material	$AgSnO_2$
Maximum switching voltage	250 V AC/DC
Minimum switching voltage	5 V AC/DC

Limiting continuous current	6 A (N/O contact)
	3 A (N/C contact 11/12)
	6 A (N/C contact 71/72)
Maximum inrush current	6 A
Inrush current, minimum	10 mA
Sq. Total current	72 A^2 ($I_{TH}^2 = I_1^2 + I_2^2 + ... + I_5^2$)
Switching power min.	50 mW
Switching capacity in accordance with IEC 60947-5-1	3 A (AC15)
	5 A (DC13)
Output fuse	10 A gL/gG (N/O contact)
	6 A gL/gG (N/C contact)

Relay

Interrupting rating (ohmic load) max.	see load limit curve

Connection data

Connection technology

pluggable	yes

Conductor connection

Connection method	Screw connection
Conductor cross-section rigid	0.2 mm² ... 2.5 mm²
Conductor cross-section flexible	0.2 mm² ... 2.5 mm²
Conductor cross-section AWG	24 ... 12
Stripping length	7 mm
Screw thread	M3
Tightening torque	0.5 Nm ... 0.6 Nm

Signaling

Operating voltage display	2 x green LED

Dimensions

Width	35 mm
Height	99 mm
Depth	114.5 mm

Material specifications

Color (Housing)	yellow (RAL 1018)
Housing material	PA

Characteristics

Safety data

Stop category (EN 60204-1)	0

Safety data: EN ISO 13849

Performance level (PL)	e (In conjunction with suitable evaluating device)

Safety data: IEC 61508 - High demand

Safety Integrity Level (SIL)	3 (In conjunction with suitable evaluating device)

Safety data: IEC 61508 - Low demand

Safety Integrity Level (SIL)	3 (In conjunction with suitable evaluating device)

Safety data: EN IEC 62061

Safety Integrity Level (SIL)	3 (In conjunction with suitable evaluating device)

Environmental and real-life conditions

Ambient conditions

Degree of protection	IP20
Min. degree of protection of inst. location	IP54
Ambient temperature (operation)	-20 °C ... 55 °C (observe derating)
Ambient temperature (storage/transport)	-40 °C ... 70 °C
Maximum altitude	≤ 2000 m (Above sea level)
Max. permissible humidity (storage/transport)	75 % (on average, 85% infrequently, non-condensing)
Max. permissible relative humidity (operation)	75 % (on average, 85% infrequently, non-condensing)
Shock	15g
Vibration (operation)	10 Hz ... 150 Hz, 2g

Standards and regulations

Air clearances and creepage distances between the power circuits

Standards/regulations	EN 60947-5-1

Mounting

Mounting type	DIN rail mounting
Assembly note	Observe derating
Mounting position	vertical or horizontal

Drawings

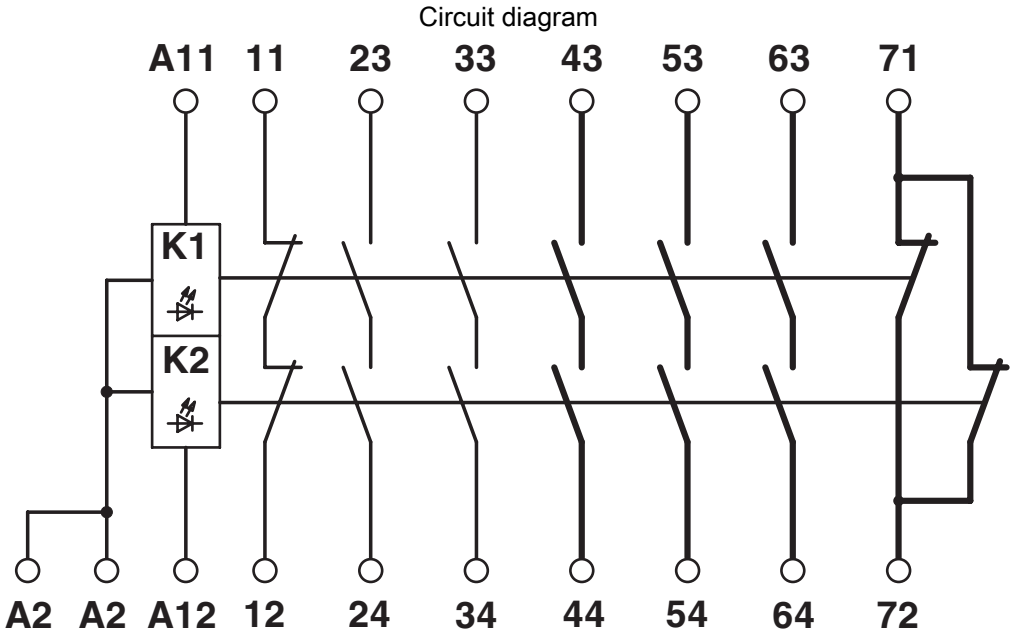

Block diagram

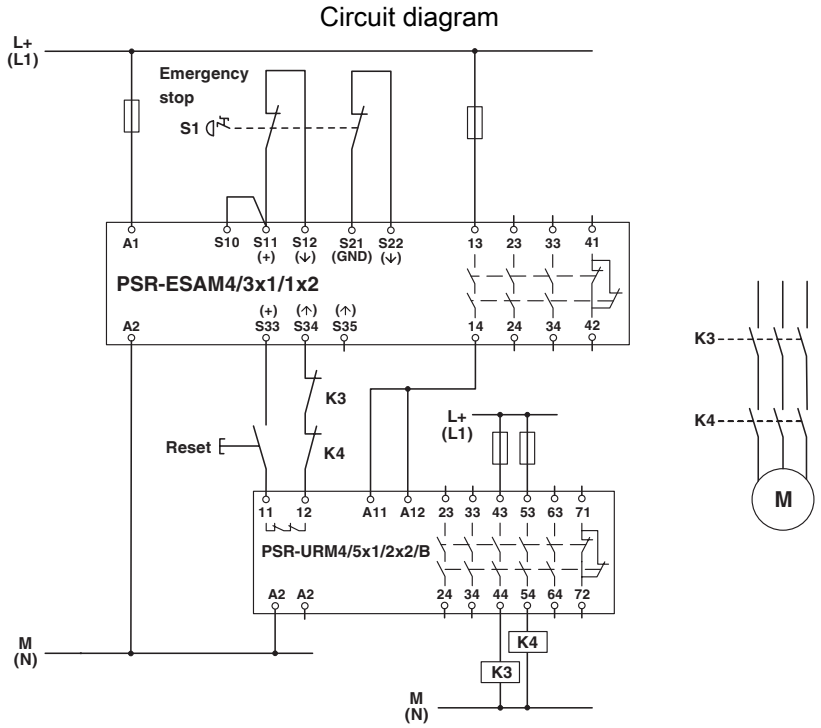

1-channel connection with integration of the confirmation current path and externally monitored contacts

Classifications

ECLASS

ECLASS-13.0	27371819

ETIM

ETIM 9.0	EC001449

UNSPSC

UNSPSC 21.0	39122200

Environmental product compliance

EU RoHS

Fulfills EU RoHS substance requirements	Yes
Exemption	7(a), 7(c)-I

China RoHS

Environment friendly use period (EFUP)	EFUP-50
	An article-related China RoHS declaration table can be found in the download area for the respective article under "Manufacturer declaration". For all articles with EFUP-E, no China RoHS declaration table issued and required.

EU REACH SVHC

REACH candidate substance (CAS No.)	Lead(CAS: 7439-92-1)
SCIP	ed1580f1-193a-4732-beca-f8dd8895efa9

Phoenix Contact 2026 © - all rights reserved
https://www.phoenixcontact.com

PHOENIX CONTACT Ltd
Halesfield 13, Telford
Shropshire, TF7 4PG
01952 681700
info@phoenixcontact.co.uk