# EMG 30-SPK-10K LIN - Setpoint adjuster

2942137

https://www.phoenixcontact.com/gb/products/2942137

Please be informed that the data shown in this PDF document is generated from our online catalog. Please find the complete data in the user documentation. Our general terms of use for downloads are valid.



Cascading setpoint value potentiometer, for selecting presettable setpoints via a 24 V control signal, resistance value 10 kΩ

## Commercial data

| | |
|---|---|
| Item number | 2942137 |
| Packing unit | 10 pc |
| Minimum order quantity | 10 pc |
| Sales key | DK1129 |
| Product key | DK1129 |
| GTIN | 4017918080624 |
| Weight per piece (including packing) | 68.21 g |
| Weight per piece (excluding packing) | 68.21 g |
| Customs tariff number | 85334010 |
| Country of origin | DE |

## Technical data

### Product properties

| | |
|---|---|
| Product type | Setpoint potentiometer |

### Electrical properties

| | |
|---|---|
| Test voltage relay winding/relay contact | 1 kV AC |

### Input data

Coil side

| | |
|---|---|
| Nominal input voltage $U_N$ | 24 V ±25 % |
| Typical response time | < 10 ms |
| Typical release time | < 10 ms |
| Protective circuit | Damping diode, polarity protection diode |
| Operating voltage display | yes |

Potentiometer

| | |
|---|---|
| Potentiometer, resistance value | 10 kΩ ±20 % |
| Linearity | 5 % (of final value) |
| Potentiometer, current-carrying capacity | 0.5 W |

### Output data

Switching:

| | |
|---|---|
| Contact material | Fixed contacts: Silver palladium (AgPdAu), 3 µm hard gold-plated |
| | Mobile contacts: Silver palladium (AgPd) |
| Maximum switching voltage | 10 V (depending on application) |
| Mechanical service life | > 2x $10^7$ cycles |

### Connection data

| | |
|---|---|
| Connection method | Screw connection |
| Stripping length | 8 mm |
| Screw thread | M3 |
| Conductor cross-section rigid | 0.2 mm² ... 4 mm² |
| Conductor cross-section flexible | 0.2 mm² ... 2.5 mm² |
| Conductor cross-section AWG | 24 ... 12 |

### Dimensions

| | |
|---|---|
| Dimensional drawing | 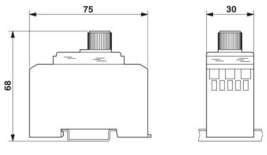 |

| | |
|---|---|
| Width | 30 mm |
| Height | 75 mm |
| Depth | 68 mm |

## Material specifications

| | |
|---|---|
| Color | green (RAL 6021) |
| Housing material | Polycarbonate fiber reinforced PC-F |

## Environmental and real-life conditions

### Ambient conditions

| | |
|---|---|
| Ambient temperature (operation) | 0 °C ... 40 °C |

## Mounting

| | |
|---|---|
| Mounting type | DIN rail mounting |
| Mounting position | any |

## Drawings

Dimensional drawing

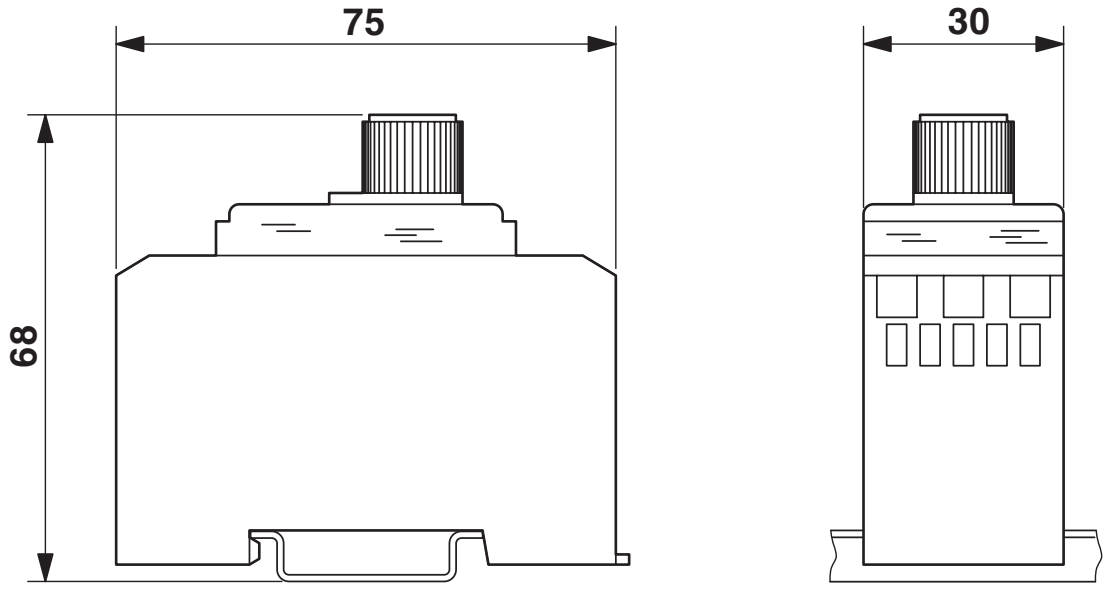

Block diagram

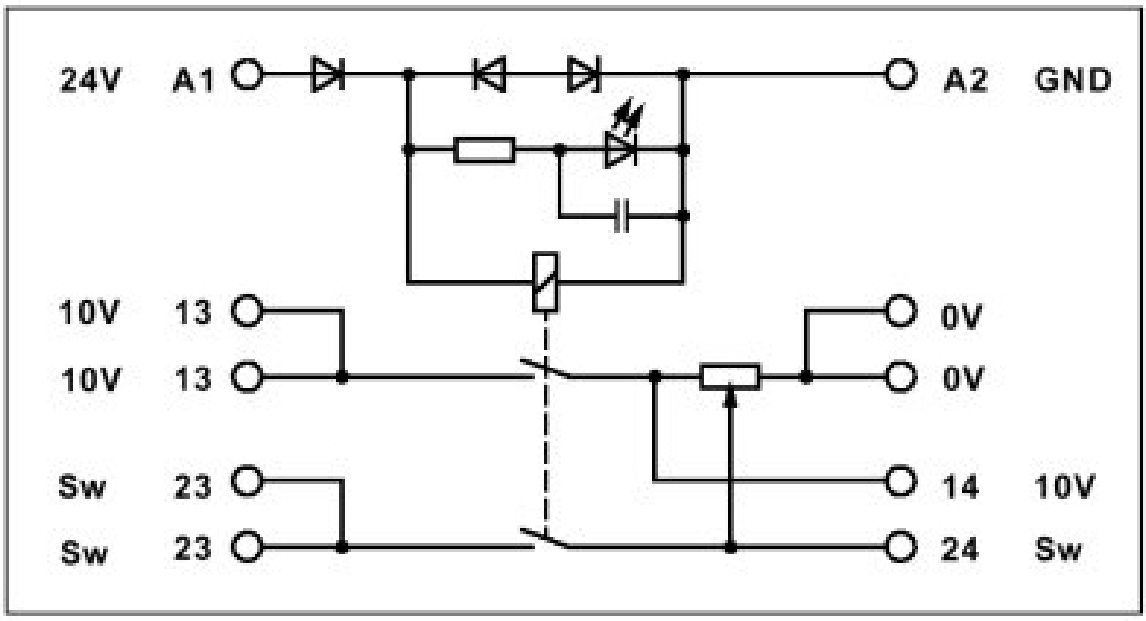

## Approvals

To download certificates, visit the product detail page: https://www.phoenixcontact.com/gb/products/2942137

**EAC**
Approval ID: RU C-DE.A*30.B.01082

## Classifications

### ECLASS

| | |
|---|---|
| ECLASS-13.0 | 27371227 |
| ECLASS-15.0 | 27371227 |

### ETIM

| | |
|---|---|
| ETIM 10.0 | EC001027 |

### UNSPSC

| | |
|---|---|
| UNSPSC 21.0 | 41113600 |

## Environmental product compliance

EU RoHS

| | |
|---|---|
| Fulfills EU RoHS substance requirements | Yes |
| Exemption | 34, 7(a), 7(c)-I |

China RoHS

| | |
|---|---|
| Environment friendly use period (EFUP) | EFUP-50 |
| | An article-related China RoHS declaration table can be found in the download area for the respective article under "Manufacturer declaration". For all articles with EFUP-E, no China RoHS declaration table issued and required. |

EU REACH SVHC

| | |
|---|---|
| REACH candidate substance (CAS No.) | Lead(CAS: 7439-92-1) |
| SCIP | bbdaa46c-ba0a-48bb-bfca-6ced2a705466 |

EF3.1 Climate Change

| | |
|---|---|
| CO2e kg | 1.802 kg CO2e |


Phoenix Contact 2026 © - all rights reserved
https://www.phoenixcontact.com



PHOENIX CONTACT Ltd
Halesfield 13, Telford
Shropshire, TF7 4PG
01952 681700
info@phoenixcontact.co.uk